GAPOSA

MOTORS & CONTROL SYSTEMS

INDUSTRIAL & COMMERCIAL *OPERATORS*



From engineering to production and planning as well as quality control, our mission is to achieve excellence in product and service. The direct result is a number of innovating patents and very reliable products with high performances.

We are proud that our team effort has contributed not only to Gaposa's success, but also to the quality of working environments and residential buildings.



Founded in 1969 by Cesare Gasparrini, Gaposa is proud of more than 50 years of activity

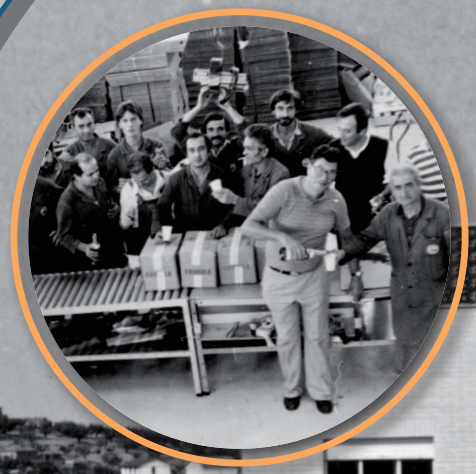

GAPOSA 56

5
motor lines for industrial doors

350
different types of tubular motors

15
quality control stations

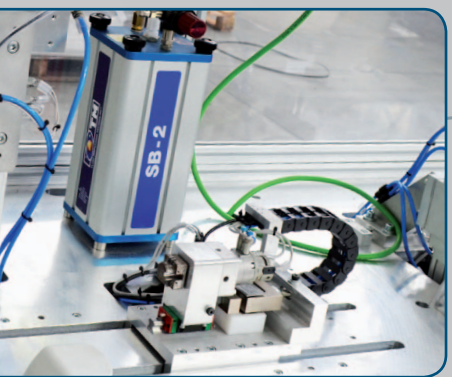

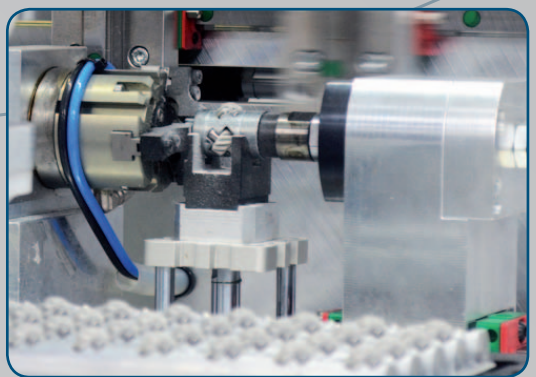



3
Production Facilities

140
Employees

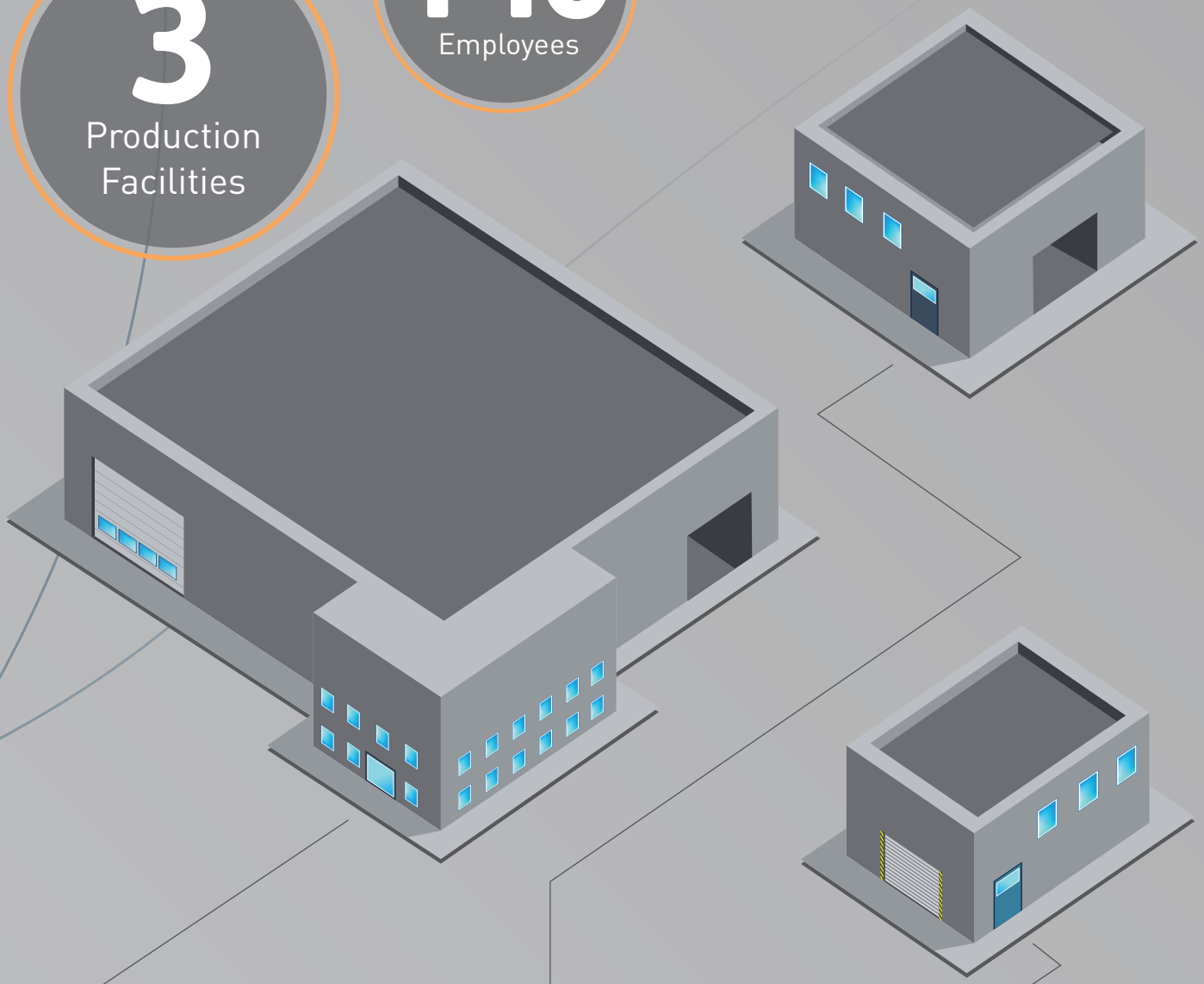

HEADQUARTERS
Motor & Control Systems

Windings

Electronics

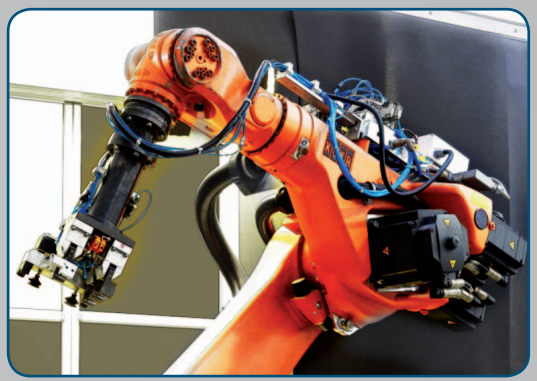



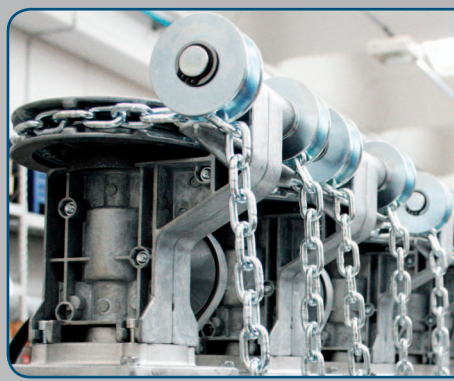

Company Profile



Gaposa is an Italian manufacturer producing automation systems for industrial and garage doors as well as for roller shutters and solar protection systems. Gaposa has persevered, from its first years of activity, in a constant R&D policy in order to anticipate market changes.

With a number of patents and a 100% Italian production, Gaposa has strengthened its position as one of the leaders in both the industrial and residential markets.

This strategy has allowed the company to remarkably increase its international presence, with 5 direct subsidiaries in USA, France, Spain, Bulgaria and China as well as exports to more than 30 countries on every continent.



USA
GAPOSA Inc.
Philadelphia

Spain
Gaposa España
Valencia

France
Gaposa France
Lyon

Greece
Bulgaria
Gaposa South East Europe
Sofia

Italy
Gaposa
Fermo

China
Yancheng Gaposa Trading
Jiangsu

Project references

Leader in silent motorisation for roller shades, Gaposa has been chosen for some of the most significant projects of the recent years.
The next references are only a few examples of projects where Gaposa motors have been preferred for their very low noise emission and high reliability.



Singapore - Create research center



New York - NYT Building



Madrid - Caja Tower



Shanghai - Baccarat residences

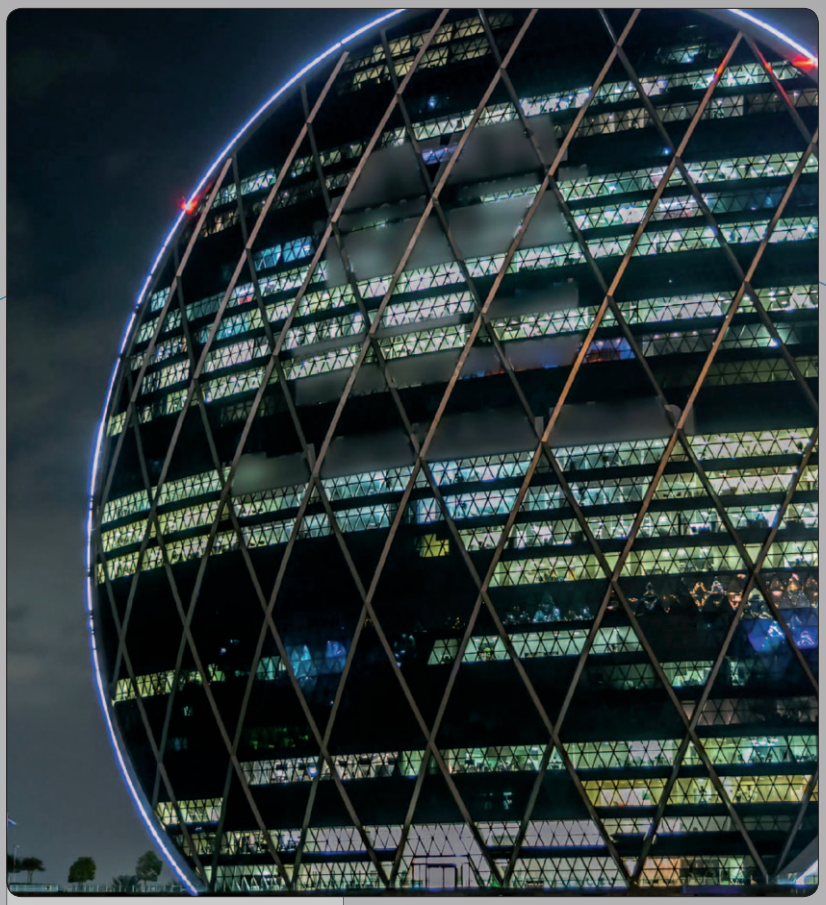

Abu Dhabi - Aldar Headquarters

Paris - First Tower



New York - IAC Headquarters



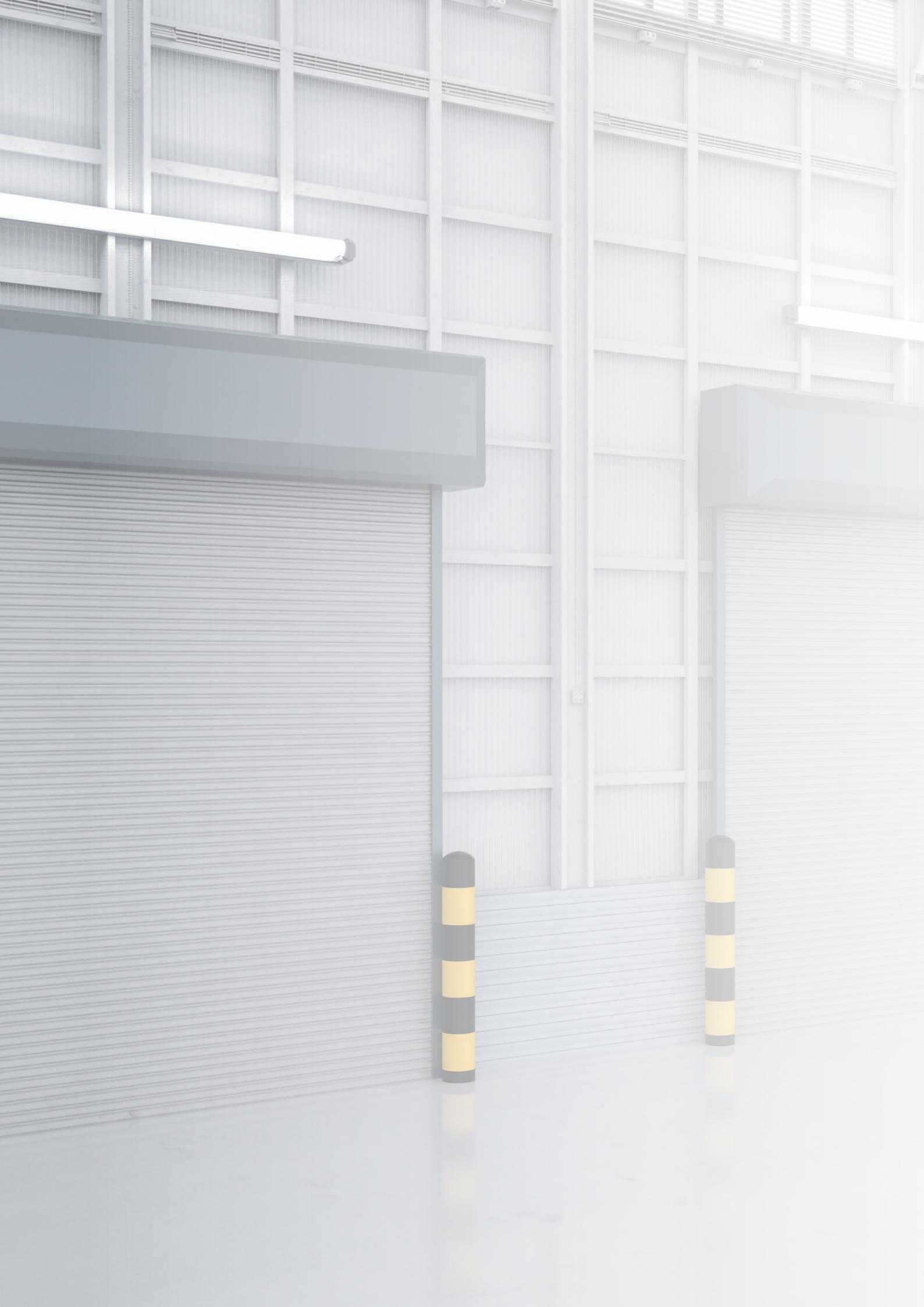

Industrial motorisation

13 COMMERCIAL SHUTTERS

14 SPLIT
16 XQ80

21 INDUSTRIAL SHUTTERS

22 Sidone BRD
24 Sidone MIDI
26 Sidone MAXXI

41 RAPID DOORS

42 Rapido BBS
43 Rapido BRD

53 SECTIONAL DOORS

54 BHS
55 BHS Completo
60 Kit BBS

63 CONTROLS AND DEVICES

64 Control unit QC800
65 Control units series QC600
66 Control units series QC500
67 Control units series QC400
68 Control units series QC40
69 Control units series QC300
70 QCMR500 / QCLSM
71 Accessories
74 Control unit QC00
75 Control unit QC000
76 Transmitters
78 Electronic safety devices
79 Accessories
80 Key selectors and pushbuttons
82 Control unit's main functions and selection table

85 SAFETY BRAKES

90 Adjustable caps
92 Selection table

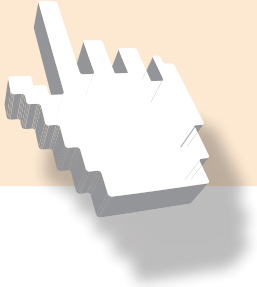


Camiceria
49
SHOP
TAX

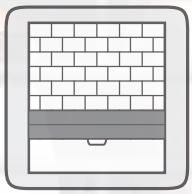

COMMERCIAL SHUTTERS

Gaposa offers two different solutions
for the automation of commercials shutters:
SPLIT. A range of light and easy to install motors,
to be used with spring balanced shutters.
XQ80. The strong and powerful tubular motors range,
an ideal solution for a space-saving rolling up.

SPLIT

XQ 80

SPLIT

The SPLIT motor is irreversible when it is provided with an electromagnetic brake. A declutch device is always supplied together with the brake.

SQ14010S
SQ16010S
SQ1909S
SQ2709SE



Optional

E with electromagnetic brake.
Code:

EF50 5 m cable
EF60 6 m cable
SBLPE declutch device

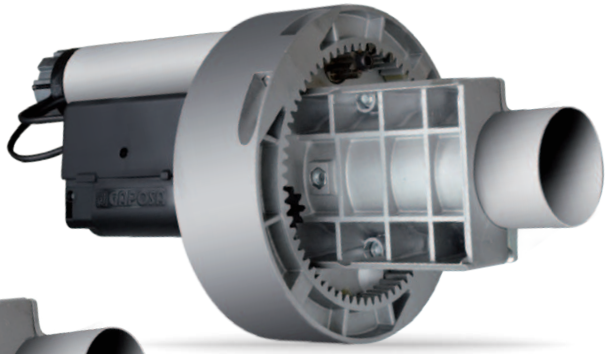

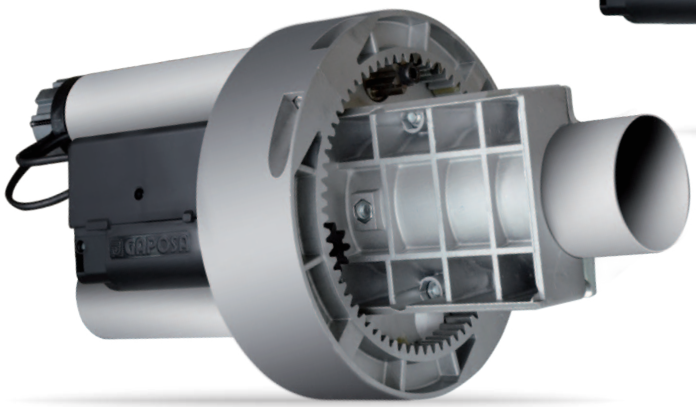

ADDITIONAL DETAILS

European directives
Split is made in accordance with product standards EN 13241-1 Doors- and EN 12453 Safety for power operated doors.

Duty rating
The Split is a single phase motor so its daily use is limited. It is perfect for garage doors and shop fronts, rolling shutters or grills while it is not recommended for doors requiring an intensive use such as parking entries.

Overload safety factor
Motor overload safety factor = 2 x the nominal motor amperage because the starting current of the Split can reach these levels for short periods.

Output speed
The maximum admissible speed depends on the construction and type of door. The admissible closing speed shall be tuned in order to allow the operating forces to comply with EN 12453.

Manual operation
The Split without brake is a reversible motor so any manual operation of the door is possible by direct raising or lowering the door manually. The door must be well counter-balanced. The Split motor with brake is irreversible so the manual operation is only possible after declutching the electromagnetic brake. In both types of motors a spring safety brake is required. The counter-balancing system should be inspected at least once a years.

LIMIT SWITCH

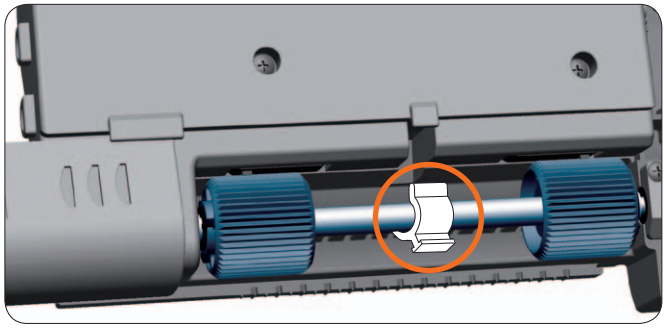

Easy top limit setting
with clip

OPTIONAL

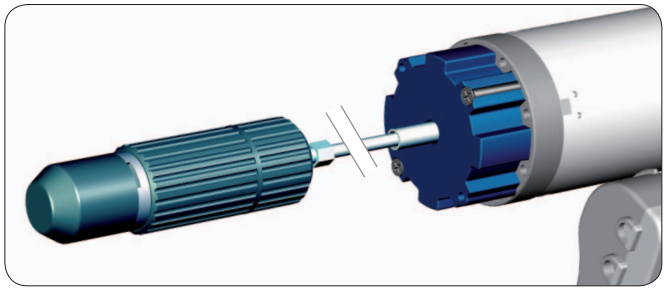

Electromagnetic brake
with declutch device

TECHNICAL DETAILS

	SQ14010S	SQ16010S	SQ1909S	SQ2709SE
Torque (Nm)	140	160	190	270
Power Supply (V)	230	230	230	230
Frequency (Hz)	50	50	50	50
Absorption (A)	1.9	2.0	2.0	3
Power (W)	390	450	495	670
Protection Rate (IP)	42	42	42	42
Duty Rating (Min)	4	4	4	4
Output Speed (rpm)	10	10	9	9
Limit Switch Max. Turns	8	8	7	7
Weight (Kg)	6.2	7	9.2	12

DIMENSIONS mm

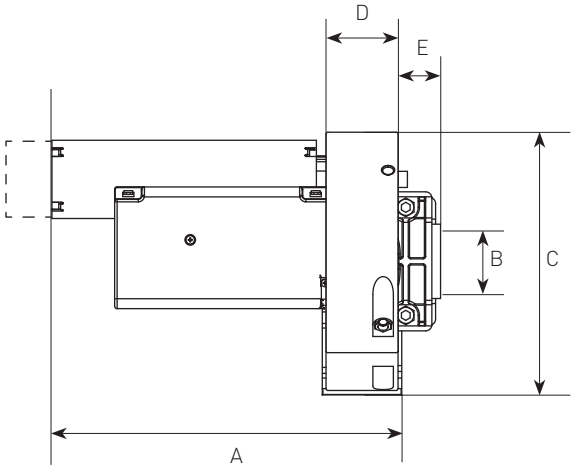

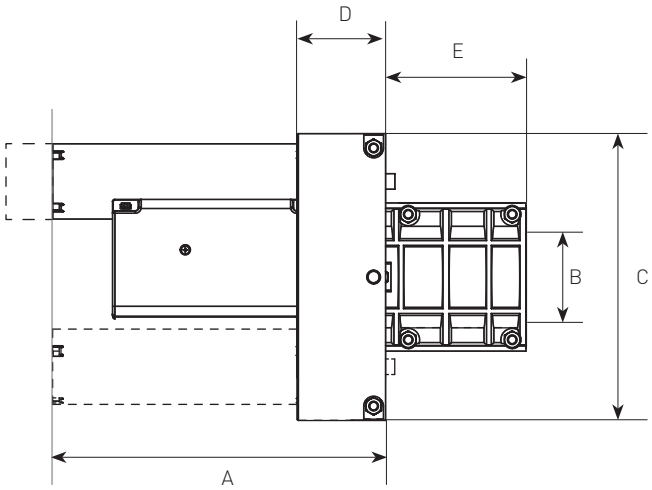

SEGMENT	**SQ**14010**S** / **SQ**16010**S**	**SQ**1909**S** / **SQ**2709**SE**
A	285 (361 Ver. ***E***)	279 (355 Ver. ***E***)
B	60 (48 with collars)	76
C	200 (220 with extension wheel)	240
D	58	74
E	23	117

XQ80

Tubular motors for rolling doors and large shutters: robust, powerful and silent for advanced and long lasting performances.



XQ8P

Tubular motors

XQ8M

Tubular motors with manual override

MAIN FEATURES

Models	XQ8P15012 XQ8M15012	XQ8P2508 XQ8M2508
Torque	150 Nm	250 Nm
Speed	12 rpm	8 rpm
Power	800 W	820 W
Absorption	3.65 A	3.75 A
Limit switch max turns	18	18

TECHNICAL DATA

Power Supply	230 VAC / 50 Hz
Working temperature	-10°C / +40°C
Duty rating	4 min
Protection	IP44

WIRING

Standard cable length	4 m
0.75 mm²	Blue - Neutral
0.75 mm²	Yellow/Green - Ground
0.75 mm²	Brown
0.75 mm²	Black

SELECTION TABLE

ø Tube x thickness (mm) ►	101.6 x 3.6			133 x 4			159 x 4.5			168 x 4.5		
Shutter's height (m) ►	3	5	7	3	5	7	3	5	7	3	5	7
	Max shutter's weight (Kg)											
XQ8P15012 / XQ8M15012	175	153	135	159	141	129	146	134	124	139	131	121
XQ8P2508 / XQ8M2508	292	254	225	265	235	216	243	223	207	231	218	202

BASIC DIAGRAMS

Along with motors and adapters, GAPOSA offers a wide range of brackets, safety brakes and self-aligning end-caps: the most complete system solution.

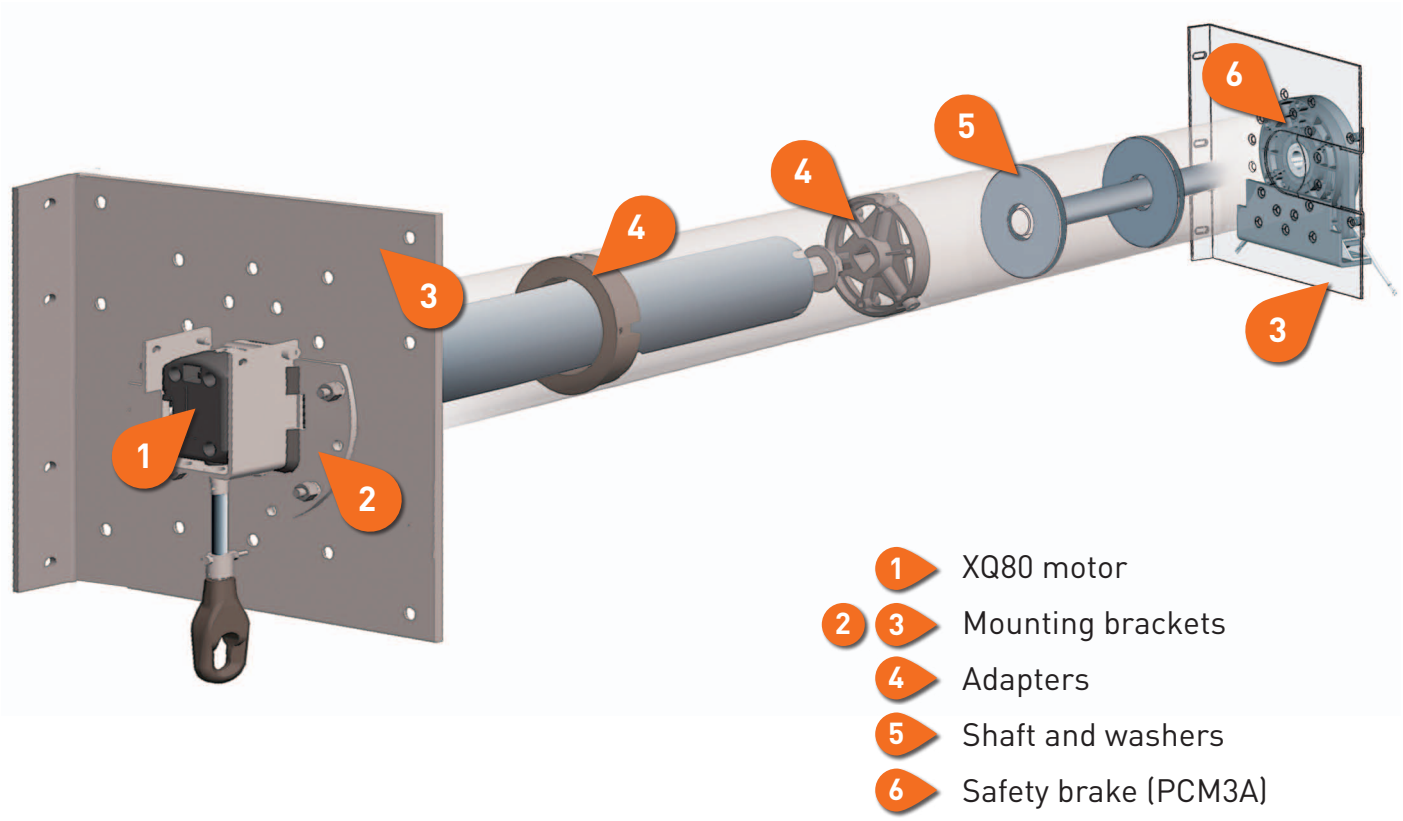

1 XQ80 motor
2 3 Mounting brackets
4 Adapters
5 Shaft and washers
6 Safety brake (PCM3A)

DIMENSIONS mm

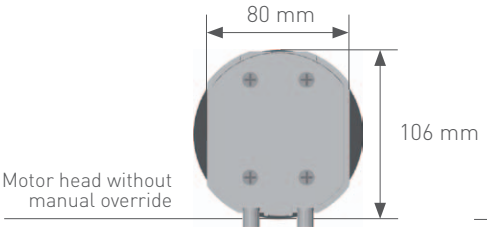

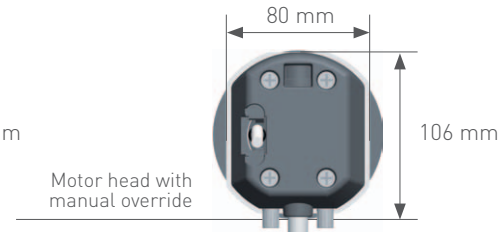

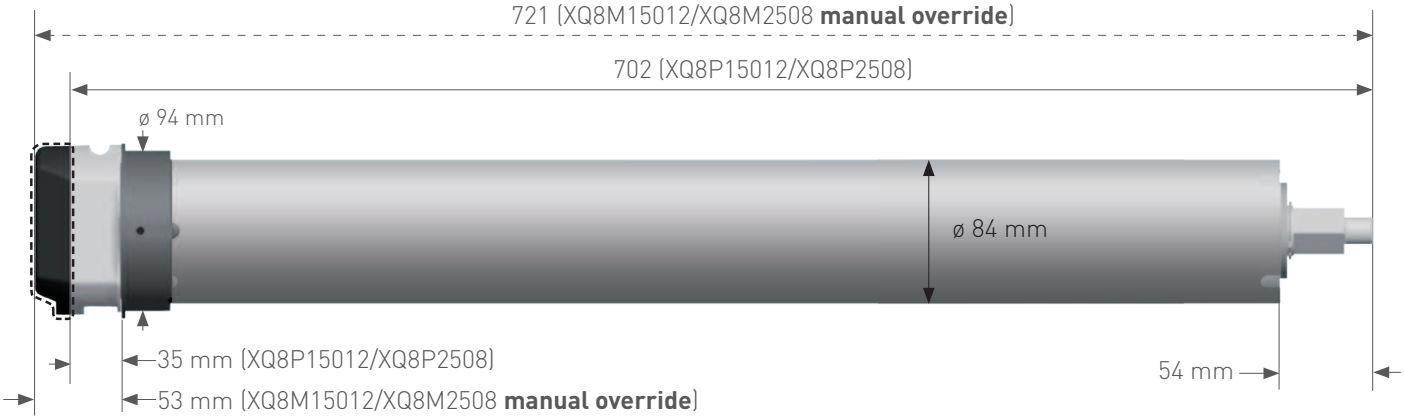

ADAPTERS

Dimensions in mm

Drive wheel	Crown adapter	Drive wheel	Crown adapter
			
Code: AXR1101 *Tube*: Round / 101.6X3.6 mm		*Code*: AXR11012 *Tube*: Round / 101.6x2.0 mm	
	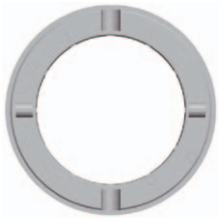		
Code: AXR1133 *Tube*: Round / 133x2,5 mm		*Code*: AXR11334 *Tube*: Round / 133x4,0 mm	
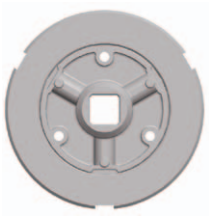			
Code: AXR1159 *Tube*: Round / 159x4,5 mm		*Code*: AXR1168 *Tube*: Round / 168x4,5 mm	
			
Code: AXR116829 *Tube*: Round / 168x2,9 mm			

SHAFTS AND WASHERS

SHAFTS	**ALM2.SF**	ø 25 mm
WASHERS	**AL2101.SF**	for 101,6x3,6 ø tube - 25 mm shaft
	AL210120.SF	for 101,6x2,0 ø tube - 25 mm shaft
	AL2133.SF	for 133x4,0 ø tube - 25 mm shaft
	AL213325.SF	for 133x2,5 ø tube - 25 mm shaft
	AL2159.SF	for 159x4,5 ø tube - 25 mm shaft
	AL2168.SF	for 168,3x4,5 ø tube - 25 mm shaft

BRACKETS

Dimensions in mm

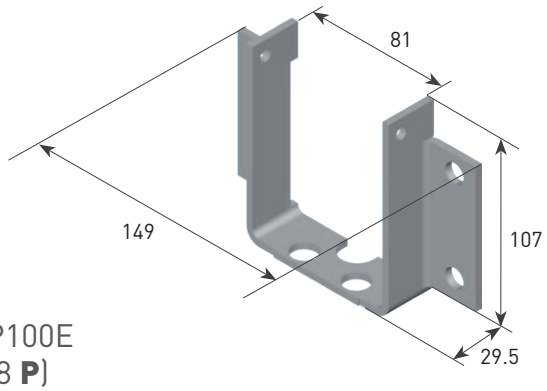

AXP100E
(XQ8 **P**)

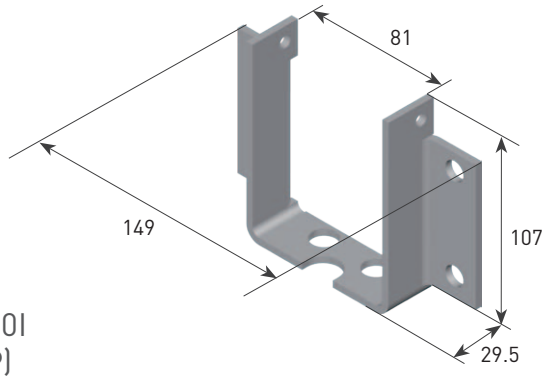

AXP100I
(XQ8 **P**)

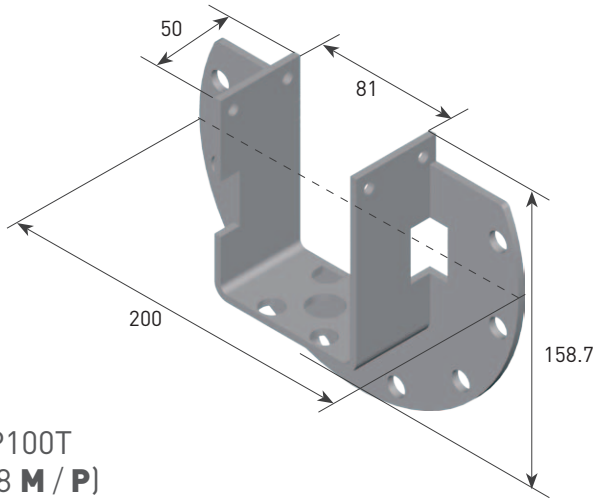

AXP100T
(XQ8 **M** / **P**)

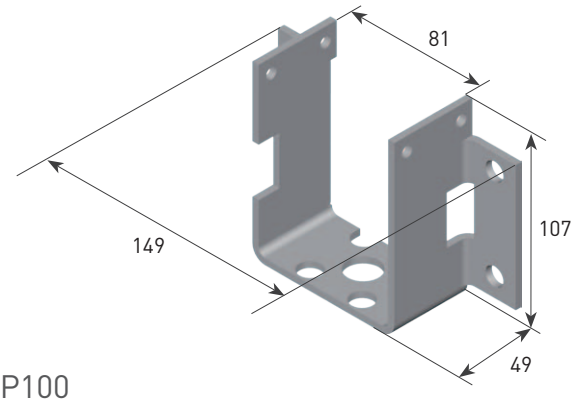

AXP100
(XQ8 **M**)

BRACKETS COMPATIBLE
WITH AXP100T:

AXP100M30
L1= 300 mm
L2= 150 mm

AXP100M34
L1= 340 mm
L2= 170 mm

AXP100M40
L1= 400 mm
L2= 200 mm

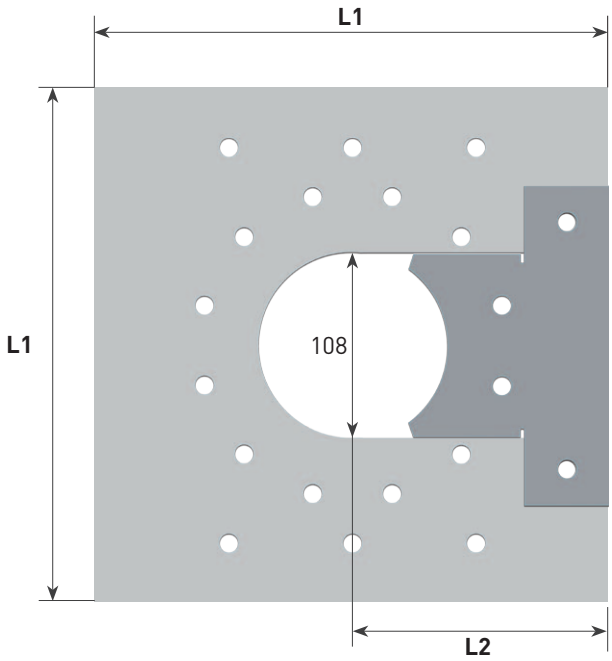

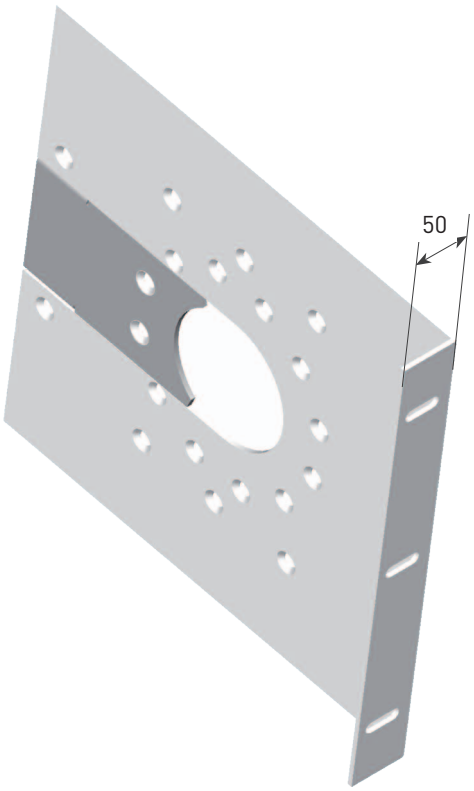





INDUSTRIAL SHUTTERS

For the industrial shutters market we offer a range of reliable and strong side operators called **SIDONE**.
These motors are equipped with an integrated safety brake and can be direct drive installed.

SIDONE BRD SIDONE MIDI SIDONE MAXXI

Sidone BRD

Gearmotors with integrated safety brake for garage doors, unbalanced sectional doors and industrial and commercial shutters

TÜV SÜD Certificate:
TorFV 24/197

ADDITIONAL DETAILS

European directives
Sidone is made in accordance with product standards EN 13241-1 Doors- and EN 12453 Safety for power operated doors.

Duty rating
There is a relation between the weight of the door and the number of movements per hour so the motor duty rating varies according to the door weight.

Overload safety factor
Motor overload safety factor = 4 x the nominal motor amperage because the starting current of the Sidone can reach these levels for short periods.

Output speed
The maximum admissible speed depends on the construction and type of door.
The admissible closing speed shall be tuned so to let the operating forces comply with the EN 12453.

Manual operation
The manual override devices when power cuts-off, are based on a max strength of the end user of almost 40kg.

Holding torque
The Sidone BRD drive unit, is capable of holding the weight of the door without slippage. The holding capability is the admissible load bearing of the worm gear construction.

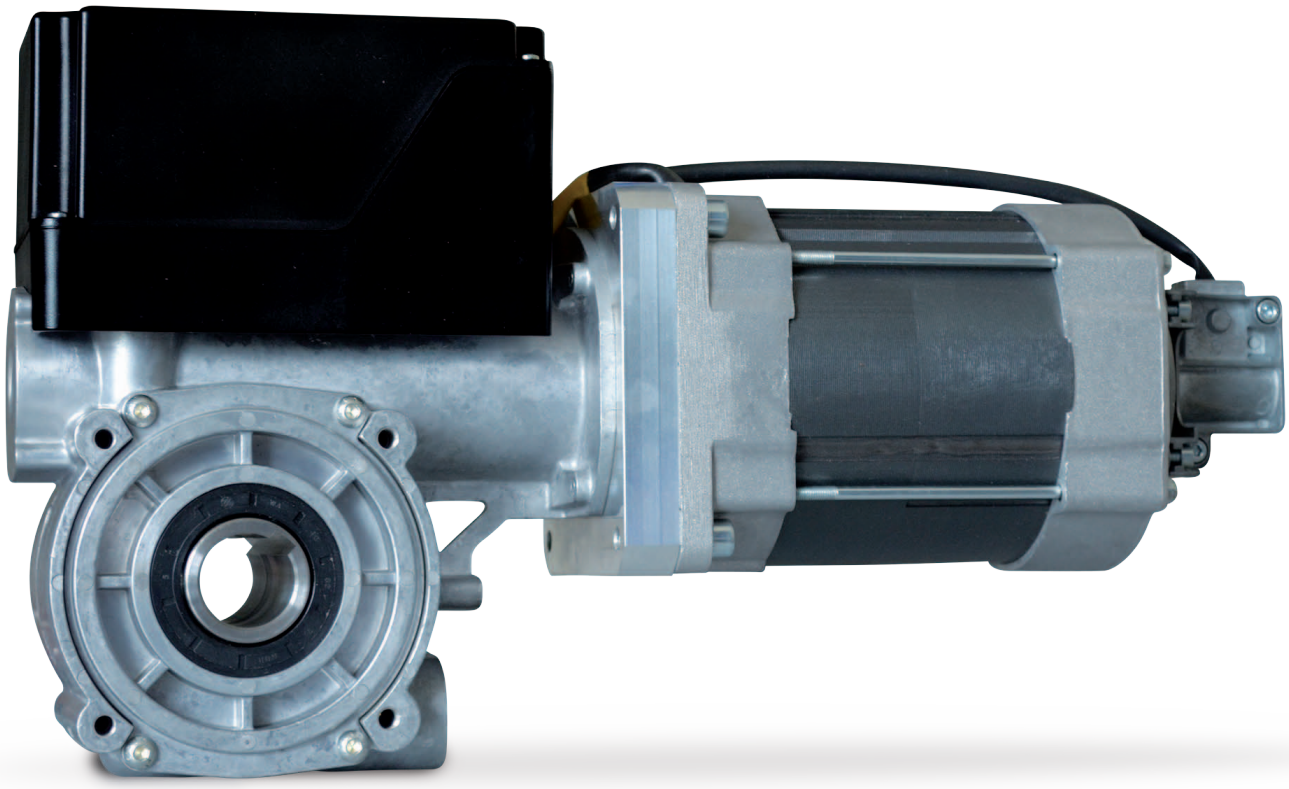

RANGE

BRD**18018**T
BRD**25012**T/M
BRD**25018**T
BRD**25036**T

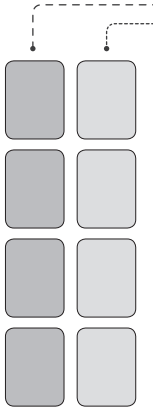

OVERRIDE OPTIONS

- **M** Hand Crank
- **C** Hand Chain Override

LIMIT SWITCH OPTIONS

- **M** Mechanical Limits
- **E** Digital Limits

POWER SUPPLY

- **T** 3~ 400V 3~ 230V
- **M** 1~ 230V

OVERRIDE OPTIONS

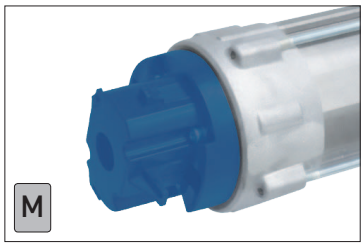

Hand crank

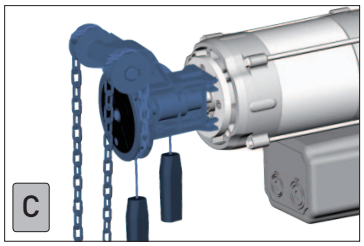

Hand chain override

LIMIT SWITCH OPTIONS

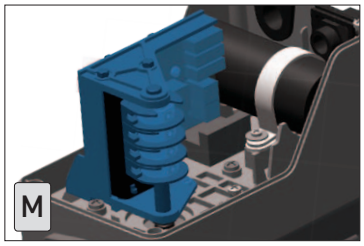

Mechanical limits

- 2 Green cams for operating limits.
- 2 Red cams for safety limits.
- 2 Yellow cams for auxiliary controls

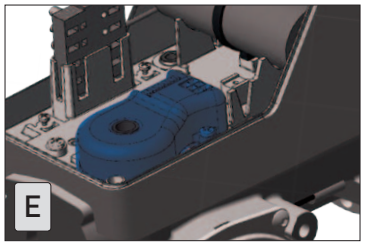

Digital limits

Absolute encoder
No readjustment after power failure
(necessary if a control unit with inverter is used)

INSTALLATION TYPE

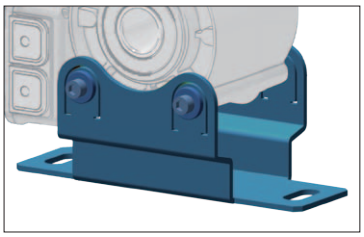

Basement

ASOMBP

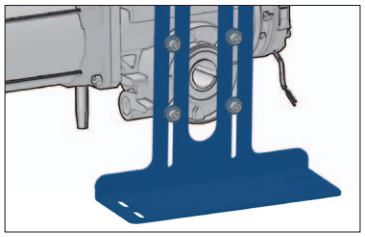

Flange bracket

ASOMLP

TECHNICAL DETAILS

	BRD18018T	BRD25012T		BRD25018T		BRD25036T		BRD25012M
Torque (Nm)	180	250		250		250		250
Output Speed (rpm)	18	12		18		36		12
Mechanical power (kW)	0.40	0.45		0.90		2.0		0.45
Power Supply (V~) [1]	3~ 400	3~ 400	3~ 230	3~ 400	3~ 230	3~ 400	3~ 230	1~ 230
Absorption (A)	2.58	2.8	5.1	2.8	5.1	3.5	6.2	4.7
Frequency (Hz)	50	50		50		50		50
Max Cycles Per Hour	20	20		20		45		20
Limit Switch max turns [2]	18	18		18		18		18
Working temperature [3]	-20°C/+60°C	-20°C/+60°C		-20°C/+60°C		-20°C/+60°C		-20°C/+60°C
Protection Rate (IP)	IP54	IP54		IP54		IP54		IP54
Hollow shaft (mm) [4]	30	30		30		30		30
Holding torque (Nm)	500	900		900		900		900

[1] Highlighted the default electrical connection diagram.
[2] Upon request version at 25 limit switch max turns.
[3] Nominal values are fully respected within a temperature range -10°C/+40°C. In case of harsh temperatures there might be a performance drop on the declared values.
[4] 25.4 mm hollow shaft upon request (BRD...**P** versions).

Sidone MIDI

The SidoneMIDI drives are all with integrated safety brake and their typical applications are: rolling shutters, rolling grilles, vertical lift doors and sectional doors without spring compensation.

TÜV SÜD Certificate:
TorFV 24/198

ADDITIONAL DETAILS

European directives
Sidone is made in accordance with product standards EN 13241-1 Doors- and EN 12453 Safety for power operated doors.

Duty rating
There is a relation between the weight of the door and the number of movements per hour so the motor duty rating varies according to the door weight.

Overload safety factor
Motor overload safety factor = 4 x the nominal motor amperage because the starting current of the Sidone can reach these levels for short periods.

Output speed
The maximum admissible speed depends on the construction and type of door.
The admissible closing speed shall be tuned so to let the operating forces comply with the EN 12453.

Manual operation
The manual override devices when power cuts-off, are based on a max strength of the end user of almost 40kg.

Holding torque
The Sidone MIDI is capable of holding the weight of the door without slippage. The holding capability is the admissible load bearing of the worm gear construction.

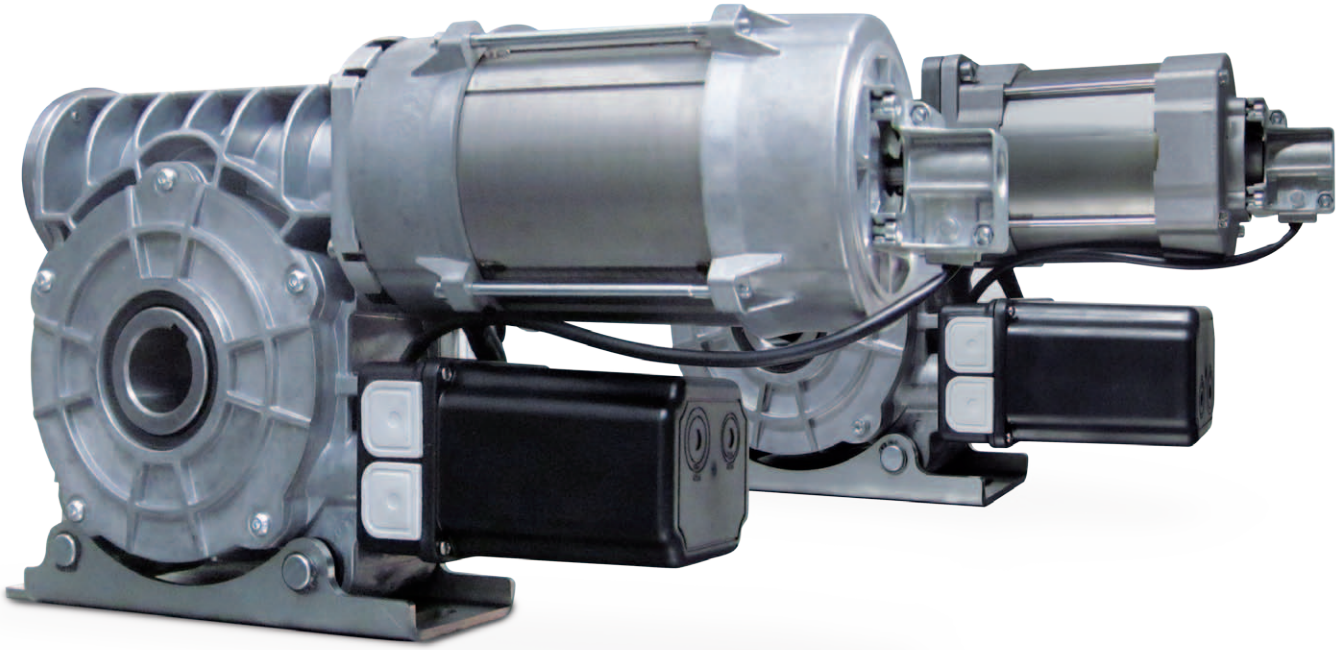

RANGE

LP40014T
LP55012T
LP65012T

OVERRIDE OPTIONS

- M Hand Crank
- C Hand Chain Override

LIMIT SWITCH OPTIONS

- M Mechanical Limits
- E Digital Limits

LP25060TME
LP45035TME

Special drives for high-speed roller shutters

OVERRIDE OPTIONS

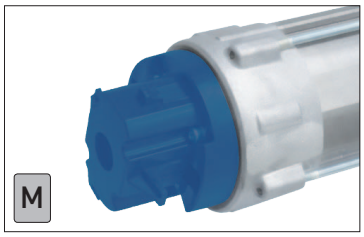

Hand crank

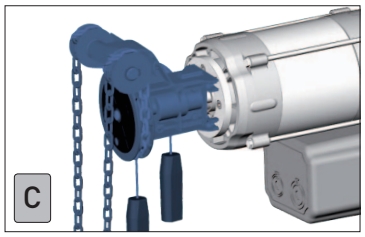

Hand chain override

LIMIT SWITCH OPTIONS

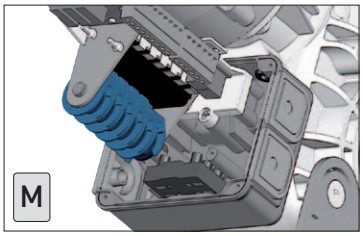

Mechanical limits

2 Green cams for operating limits
2 Red cams for safety limits
2 Yellow cams for auxiliary controls

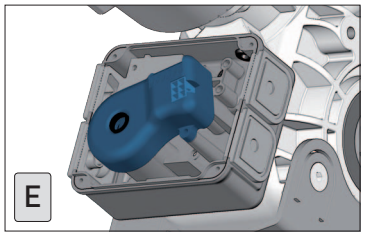

Digital limits

Absolute encoder
No readjustment after power failure (necessary if a control unit with inverter is used)

TECHNICAL DATA

	LP40014T		LP55012T		LP65012T		*Special drives for high-speed roller shutters* LP25060TME		LP45035TME	
Torque (Nm)	400		550		650		250		450	
Output Speed (rpm)	14		12		12		60		35	
Mechanical power (kW)	1.2		1.2		1.4		2.1		2.1	
Power Supply (V~) [1]	3~ 400	3~ 230	3~ 400	3~ 230	3~ 400	3~ 230	3~ 400	3~ 230	3~ 400	3~ 230
Absorption (A)	3.19	5.19	3.92	7.1	3.74	7.36	3.91	6.38	4.51	8.02
Frequency (Hz)	50		50		50		50		50	
Duty rating (ED)	S3-60%		S3-50%		S3-50%		40		40	
Limit Switch max turns [2]	12		12		12		12		12	
Working temperature [3]	-20°C/+60°C		-20°C/+60°C		-20°C/+60°C		-20°C/+60°C		-20°C/+60°C	
Protection Rate	IP54		IP54		IP54		IP54		IP54	
							GAPOSA control unit recommended: **QC600W**			

[1] Highlighted the default electrical connection diagram.
[2] Upon request version at 31 limit switch max turns.
[3] Nominal values are fully respected within a temperature range -10°C/+40°C.
In case of harsh temperatures there might be a performance drop on the declared values.

Sidone MAXXI

Gearmotors with integrated safety brake for large industrial and commercial shutters

TÜV SÜD Certificate:
TorFV 24/199

ADDITIONAL DETAILS

European directives
Sidone is made in accordance with product standards EN 13241-1 Doors- and EN 12453 Safety for power operated doors.

Duty rating
There is a relation between the weight of the door and the number of movements per hour so the motor duty rating varies according to the door weight.

Overload safety factor
Motor overload safety factor = 4 x the nominal motor amperage because the starting current of the Sidone can reach these levels for short periods.

Output speed
The maximum admissible speed depends on the construction and type of door.
The admissible closing speed shall be tuned so to let the operating forces comply with the EN 12453.

Manual operation
The handchain override, essential in the event of a power failure, is sized to withstand a maximum effort of 40 kg by the end user. The MAXXI motor's emergency manoeuvre is only intended for closing.

Holding torque
The Sidone MAXXI is capable of holding the weight of the door without slippage. The holding capability is the admissible load bearing of the worm gear construction.

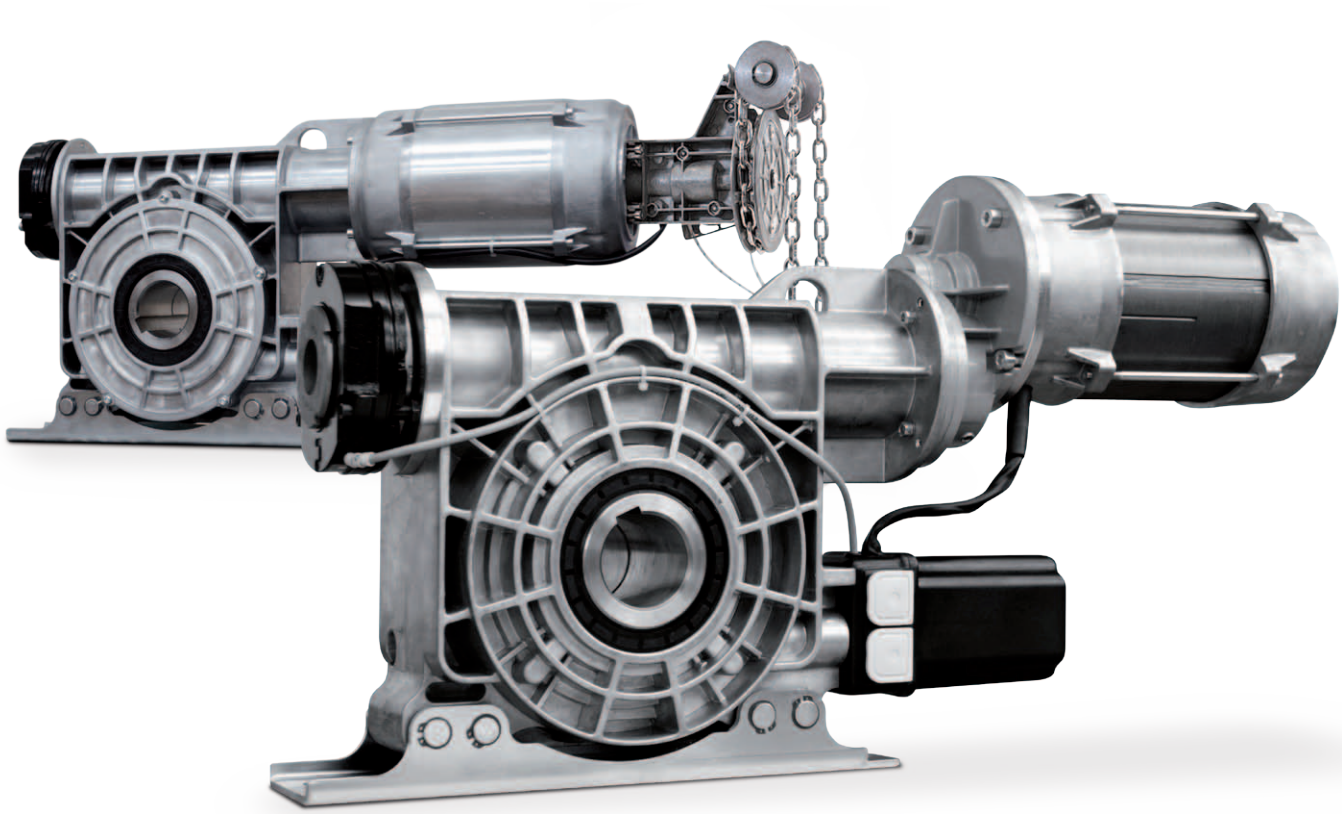

RANGE

LP 75015TC
LP 100010TC
LP 14008TC
LP 18006TC

LIMIT SWITCH OPTIONS

M Mechanical Limits

E Digital Limits

OVERRIDE OPTIONS

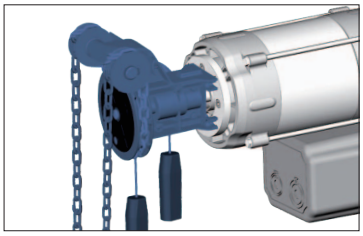

Hand chain override

LIMIT SWITCH OPTIONS

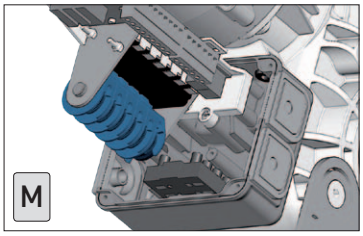

Mechanical limits

2 Green cams for operating limits
2 Red cams for safety limits
2 Yellow cams for auxiliary controls

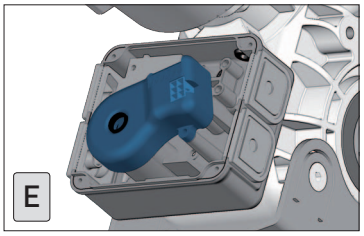

Digital limits

Absolute encoder
No readjustment after power failure (necessary if a control unit with inverter is used)

INSTALLATION TYPE

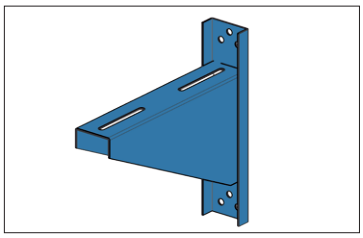

Bracket

ASOMX

TECHNICAL DATA

	LP75015T	LP100010T	LP14008T	LP18006T
Torque (Nm)	750	1000	1400	1800
Output Speed (rpm)	15	10	8	6
Mechanical power (kW)	1.4	1.9	1.4	1.9
Power Supply (V~)	3~ 400	3~ 400	3~ 400	3~ 400
Absorption (A)	4.86	6.25	4.86	6.25
Frequency (Hz)	50	50	50	50
Duty rating (ED)	S3-50%	S3-50%	S3-50%	S3-50%
Limit Switch max turns [1]	12	12	12	12
Working temperature [2]	-20°C/+60°C	-20°C/+60°C	-20°C/+60°C	-20°C/+60°C
Protection Rate	IP54	IP54	IP54	IP54
Noise (dB)	<70	<70	<70	<70

[1] Upon request version at 28 limit switch max turns.

[2] Nominal values are fully respected within a temperature range -10°C/+40°C. In case of harsh temperatures there might be a performance drop on the declared values.

DIMENSIONS (mm)

BRD**18018**T

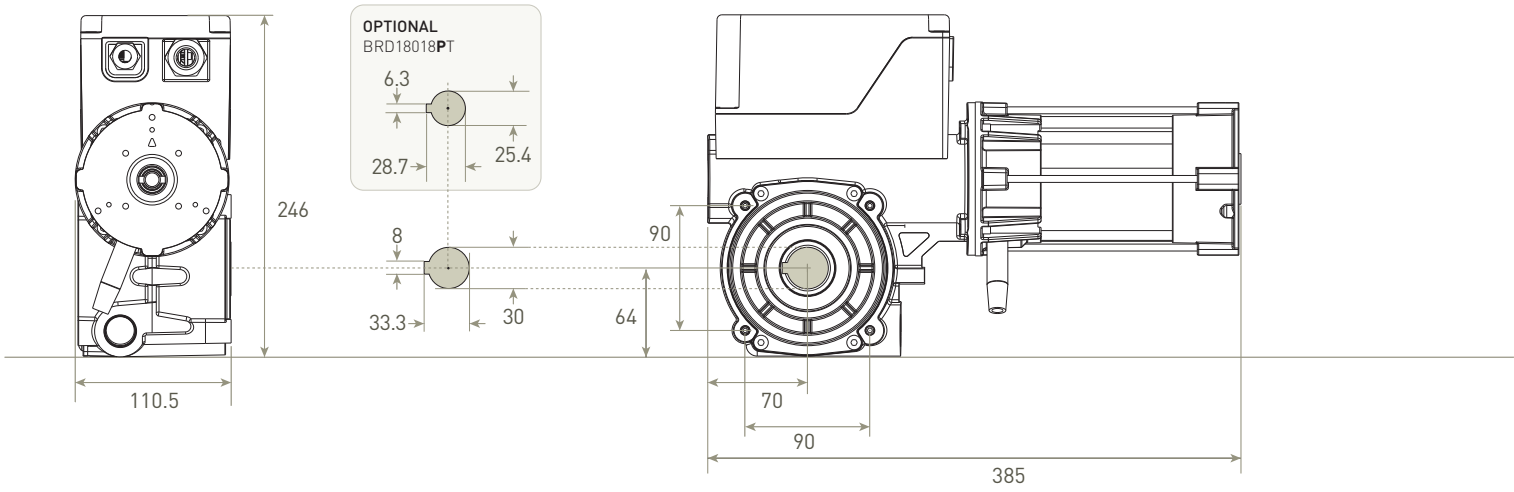

BRD**25012**M

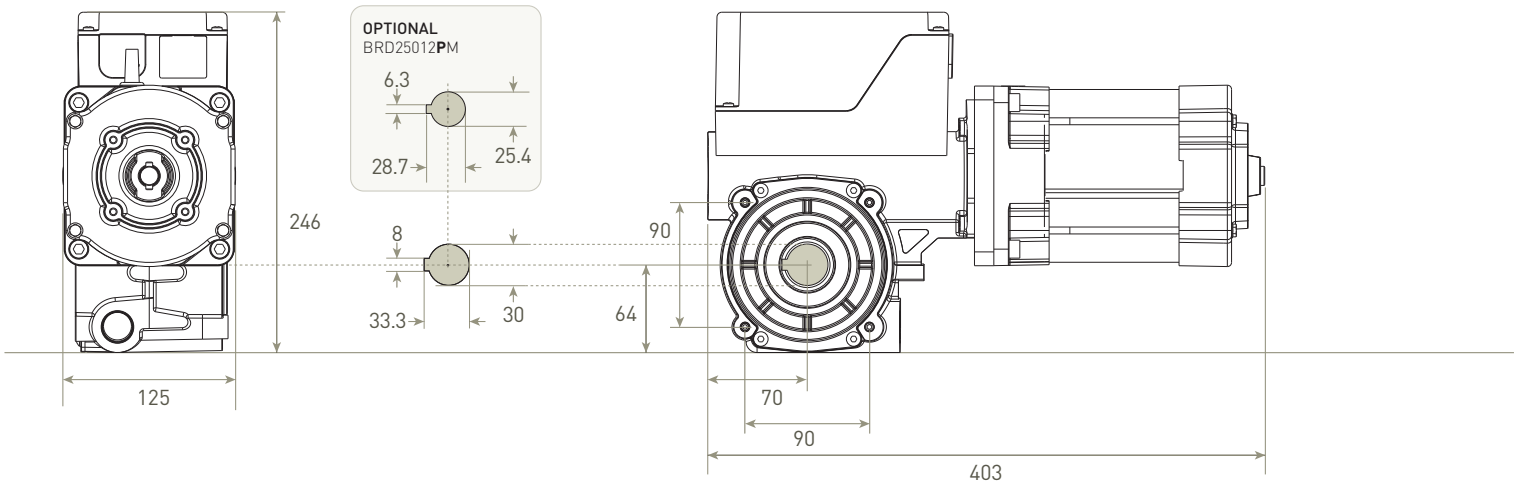

BRD**25036**T

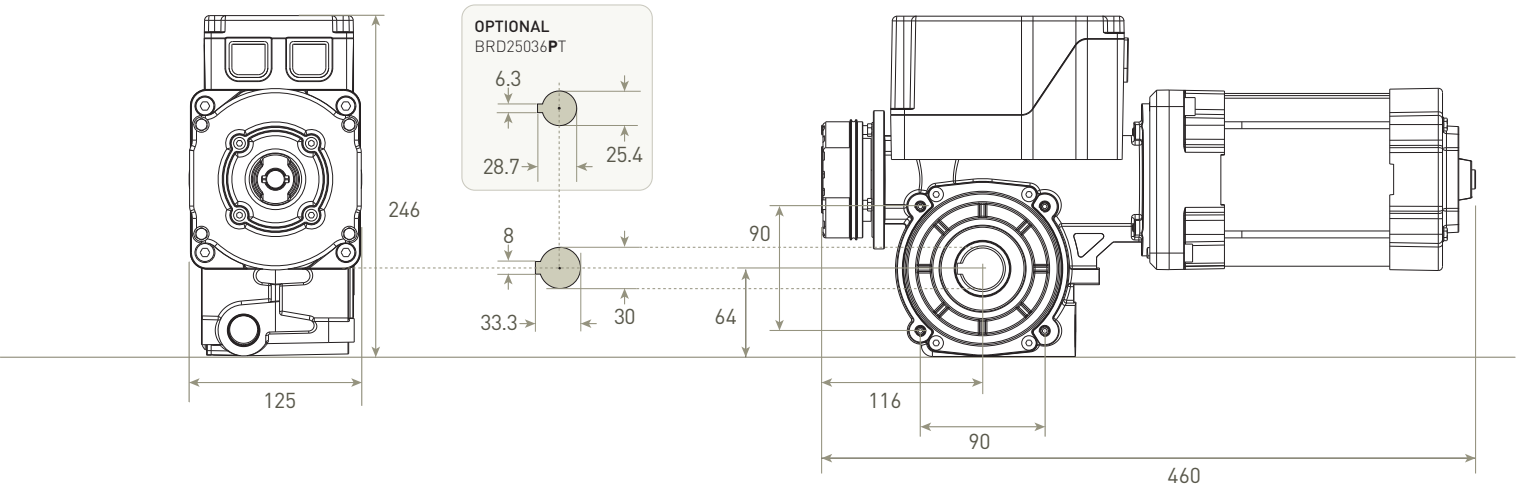

BRD**25012**T
BRD**25018**T

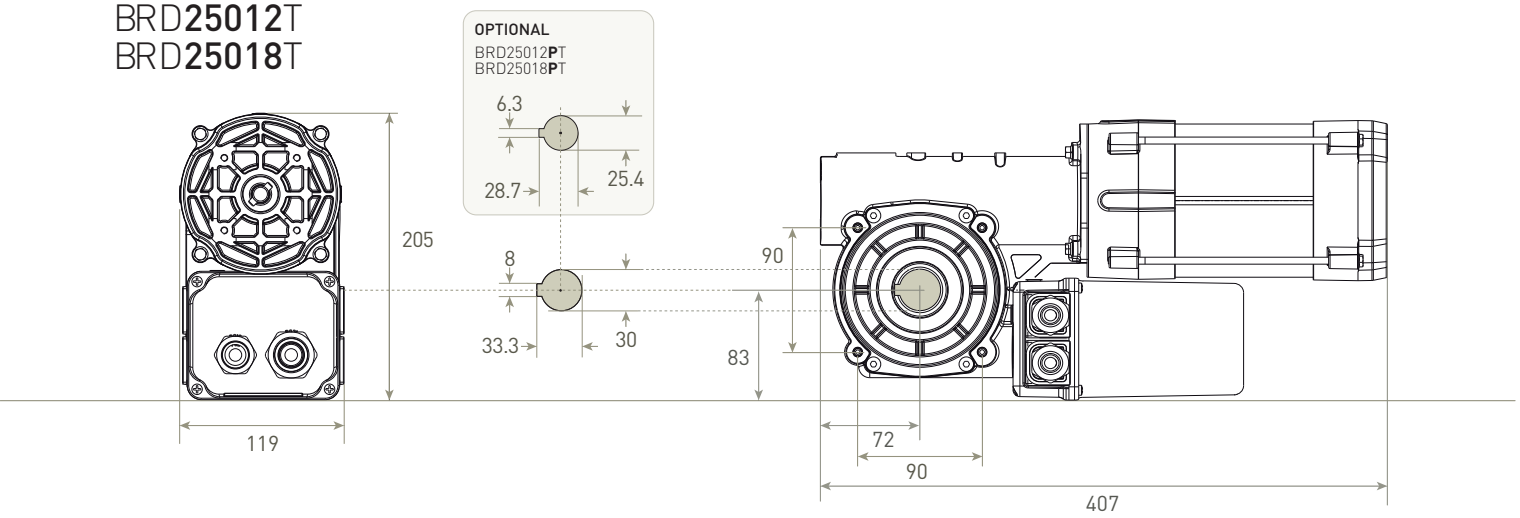

DIMENSIONS (mm)

LP**40014**T

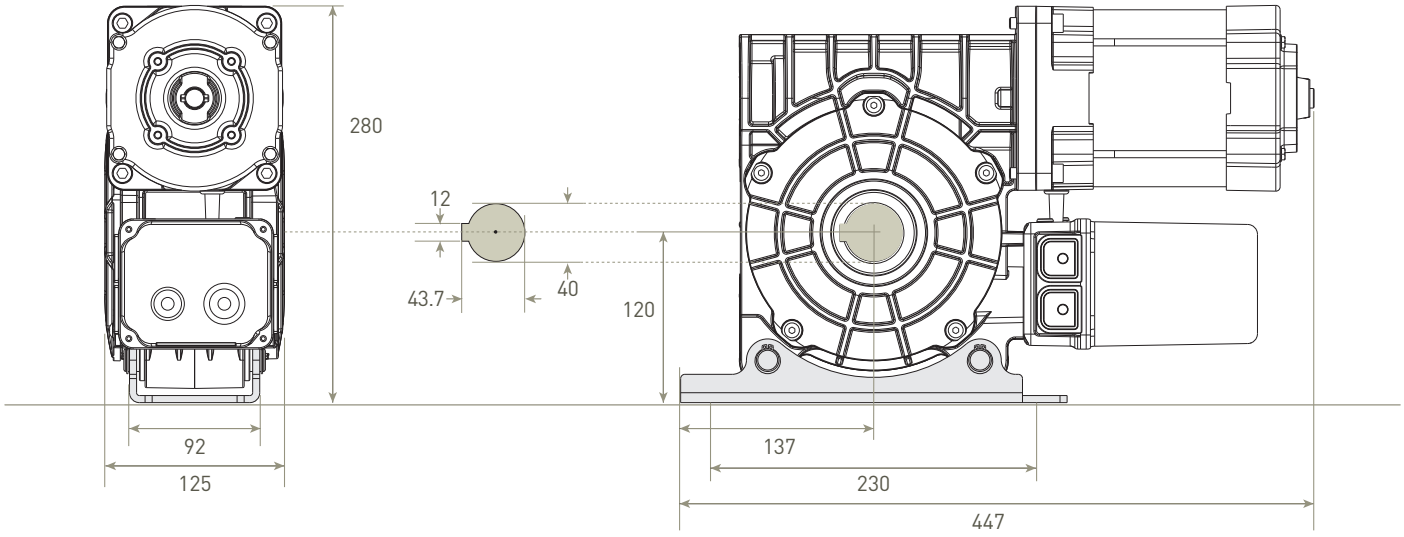

LP**55012**T

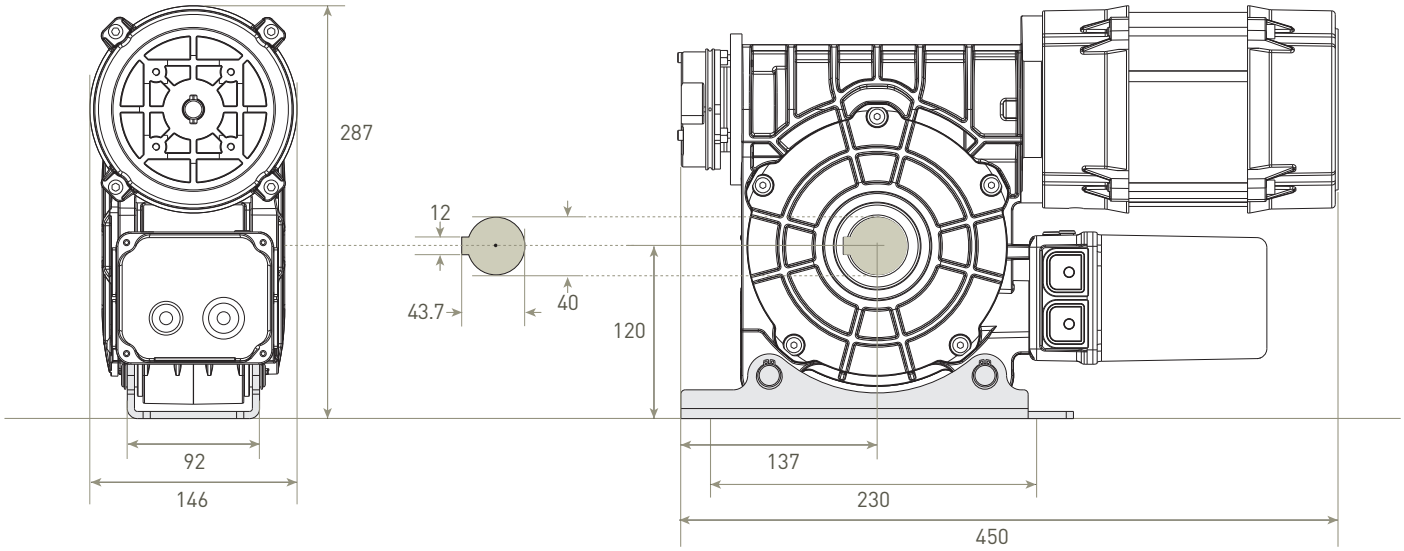

LP**65012**T

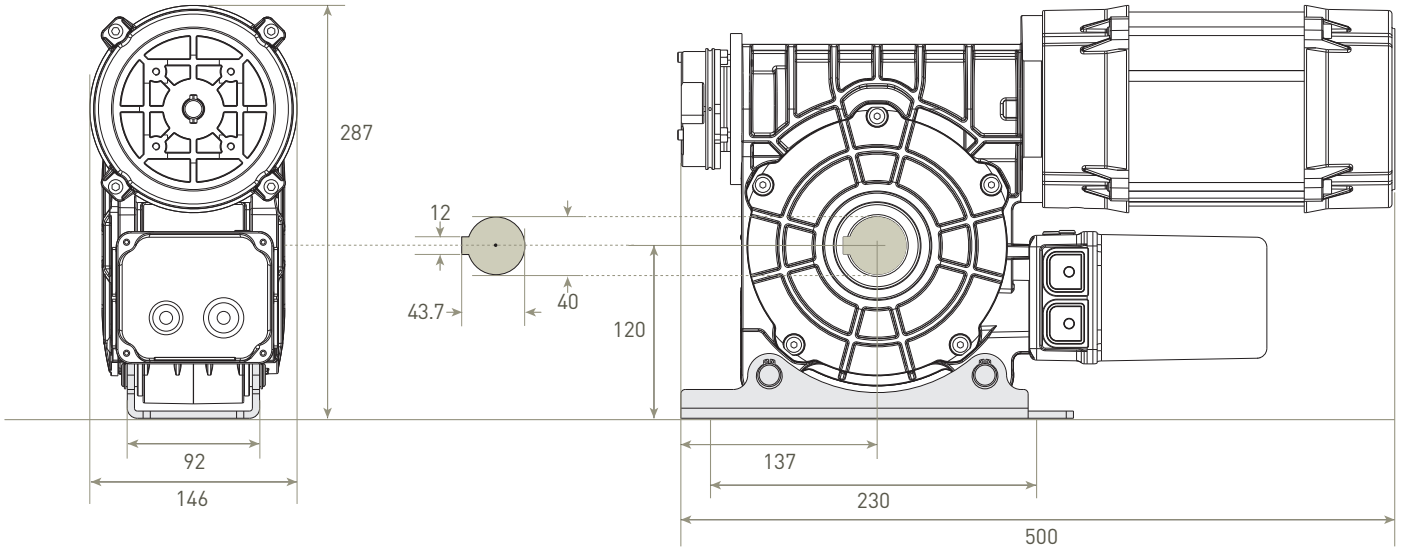

LP**25060**TME

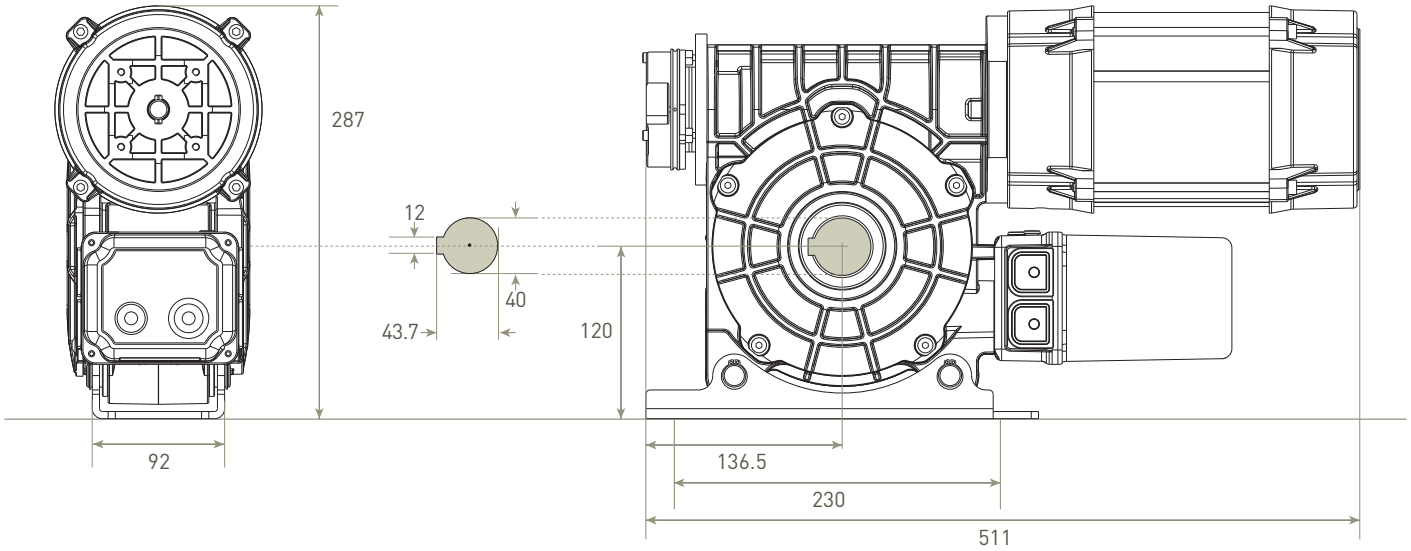

LP**45035**TME

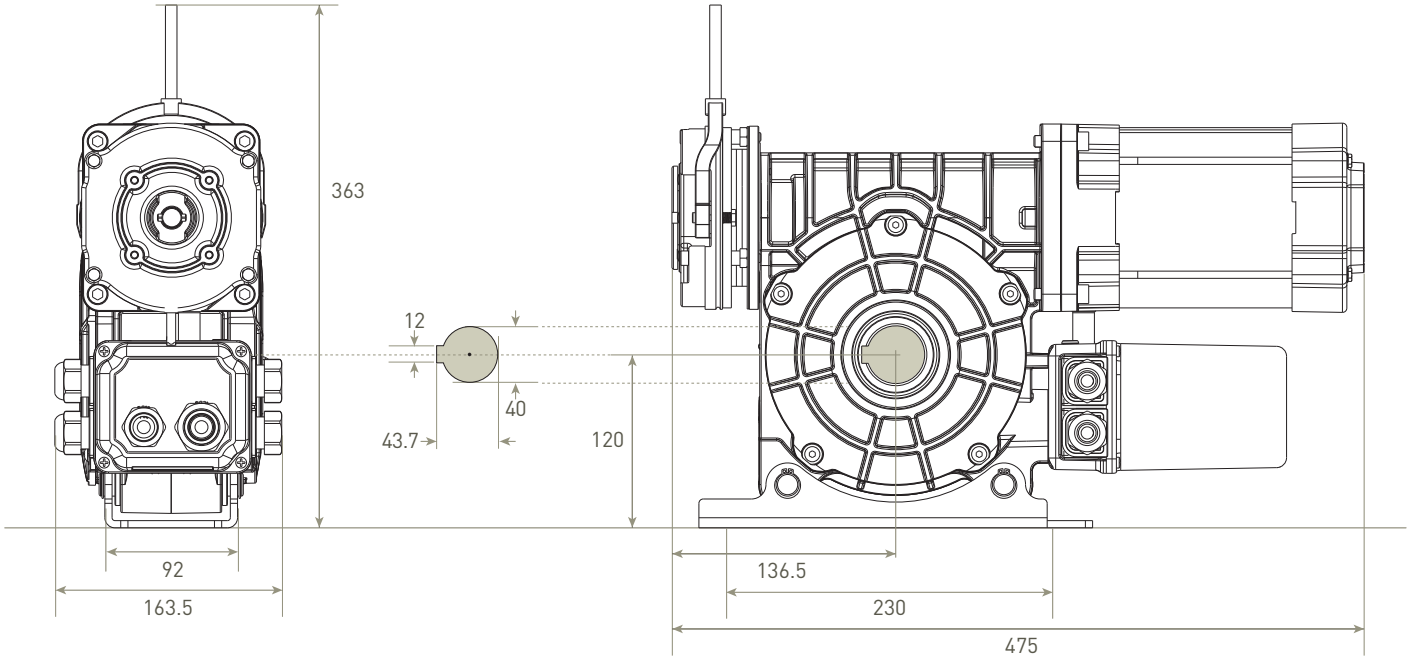

DIMENSIONS (mm)

LP**75015**T

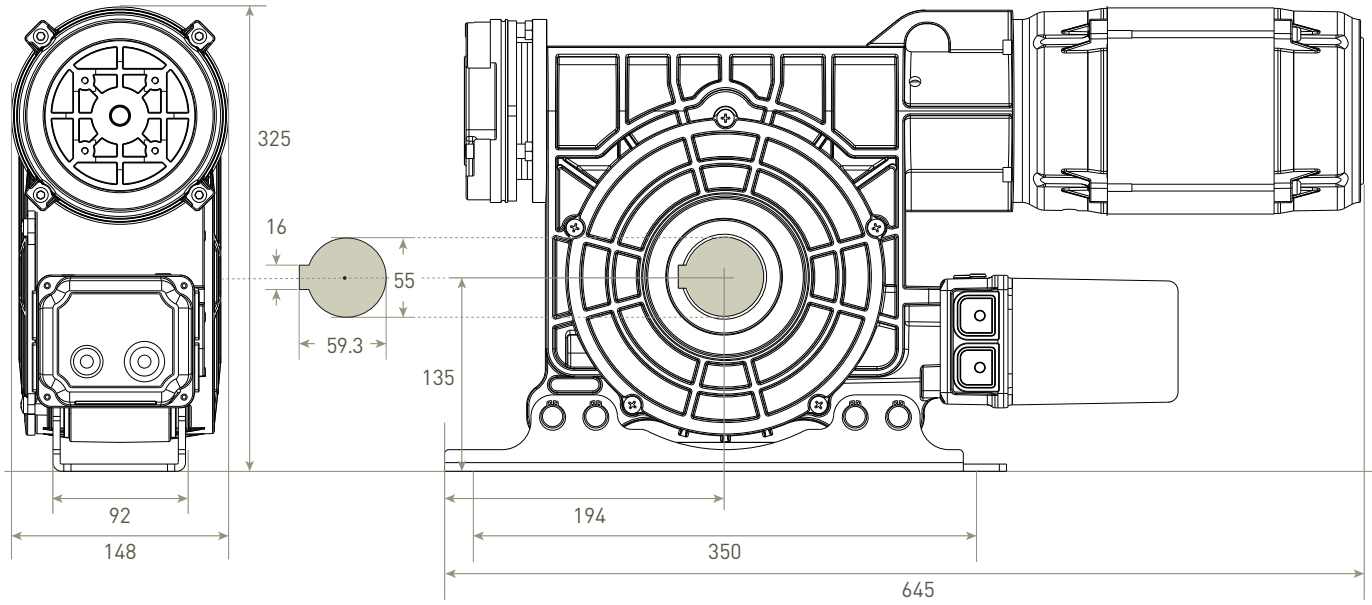

LP**100010**T

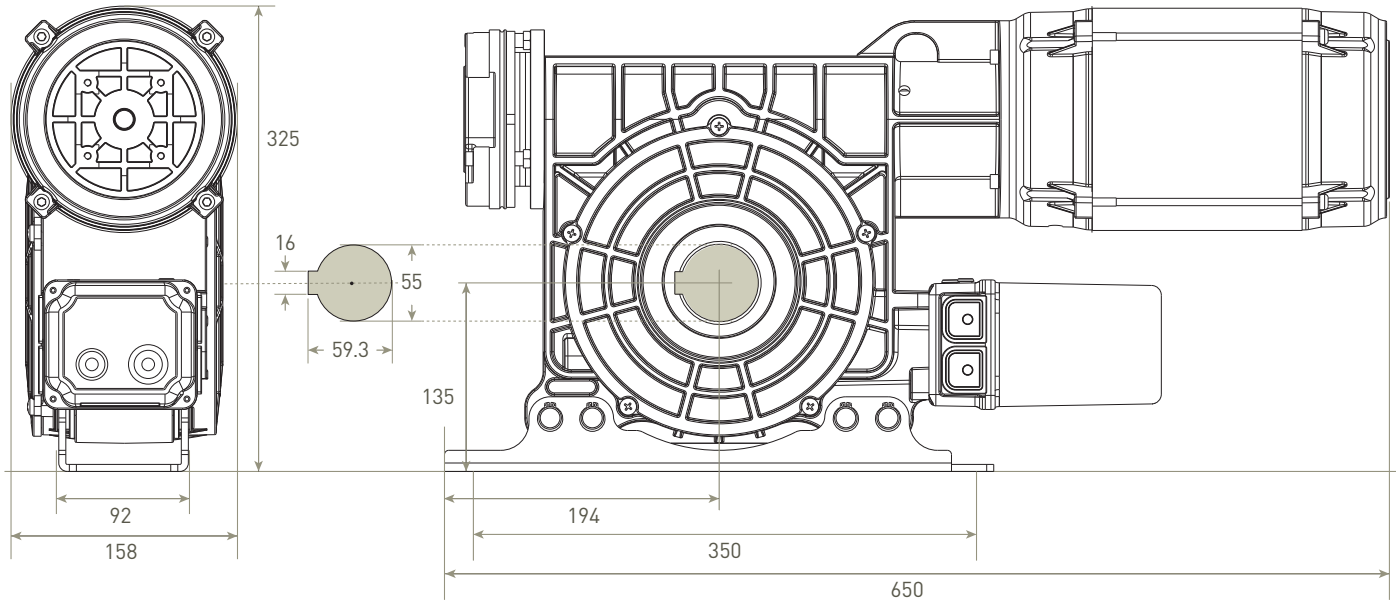

LP**14008**T

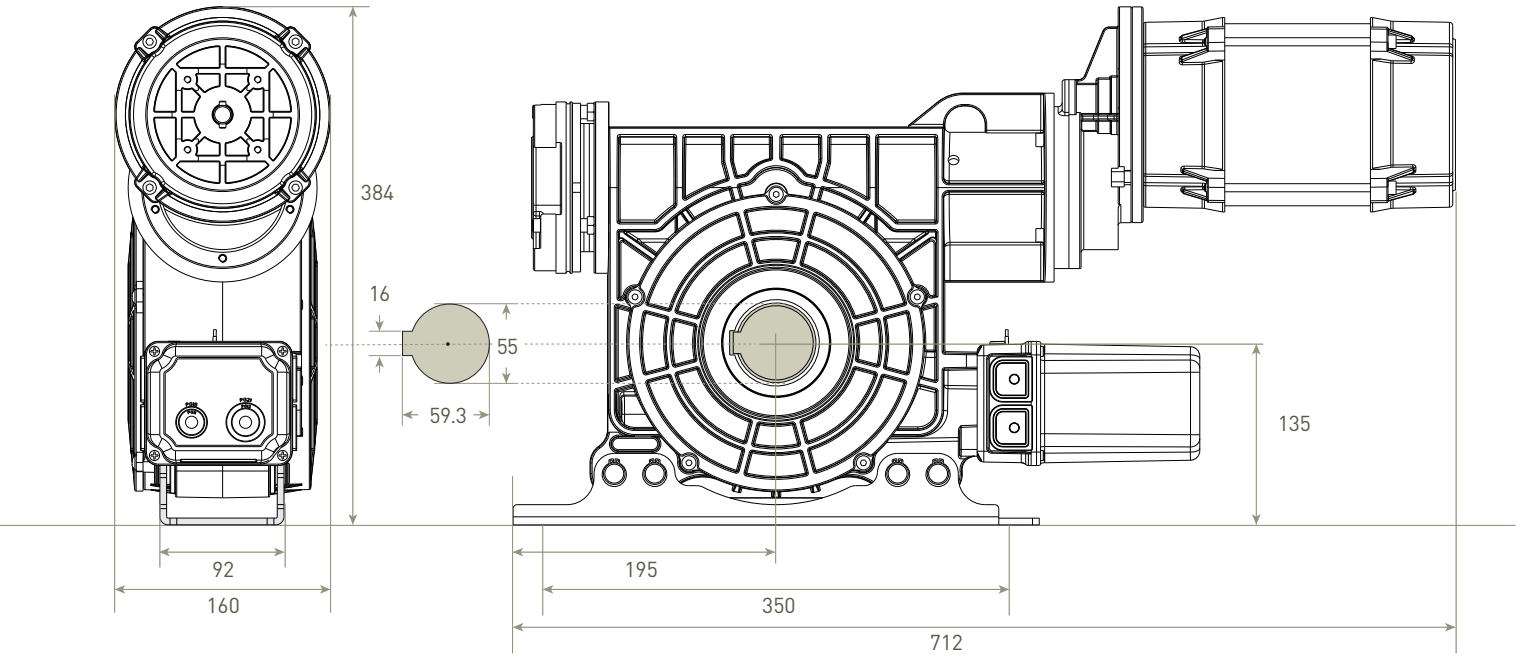

LP**18006**T

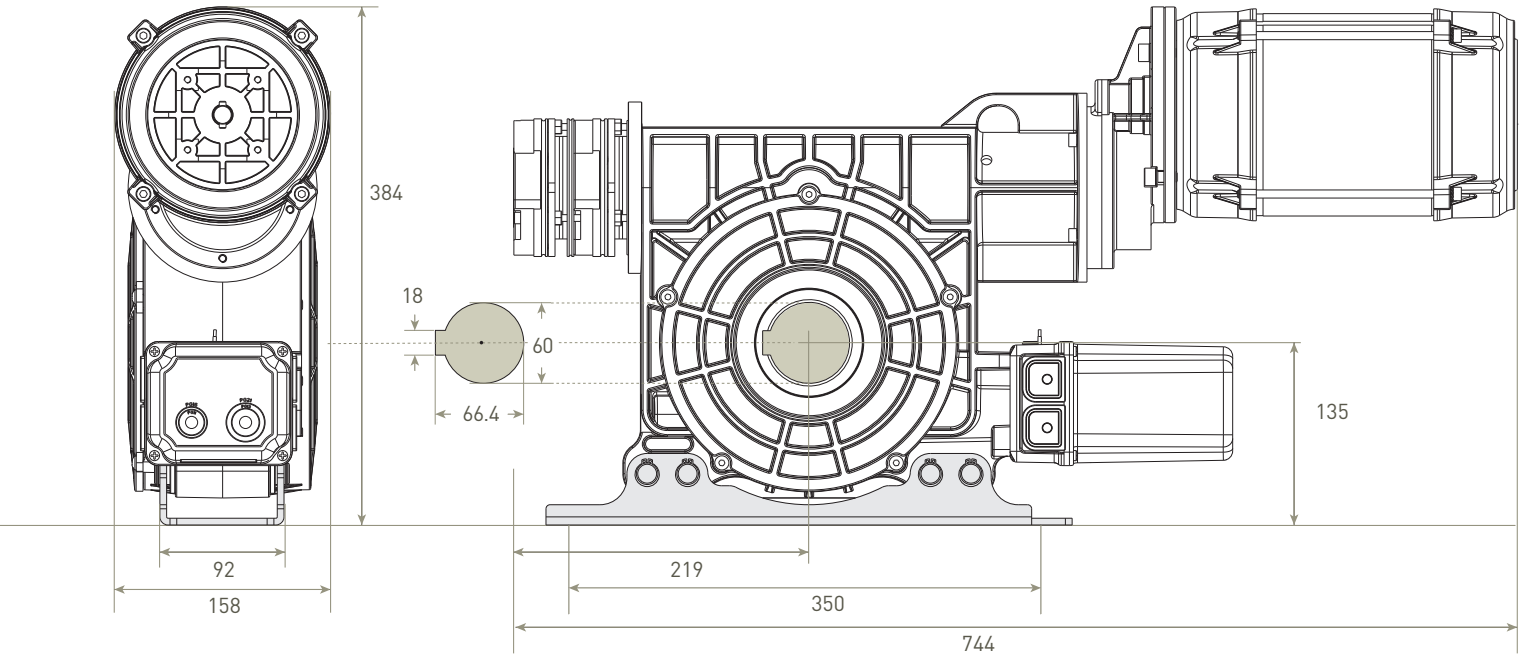

BASEMENTS

DIMENSIONS (mm)

Sidone BRD

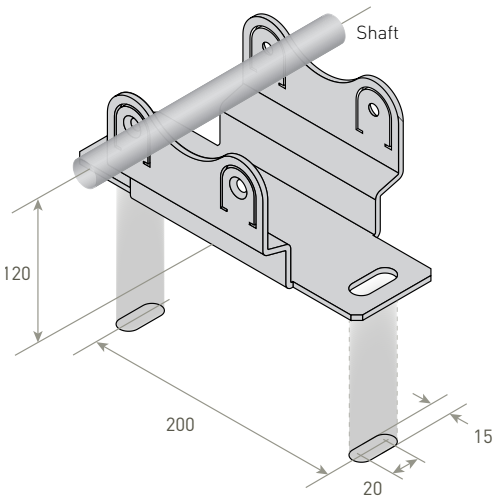

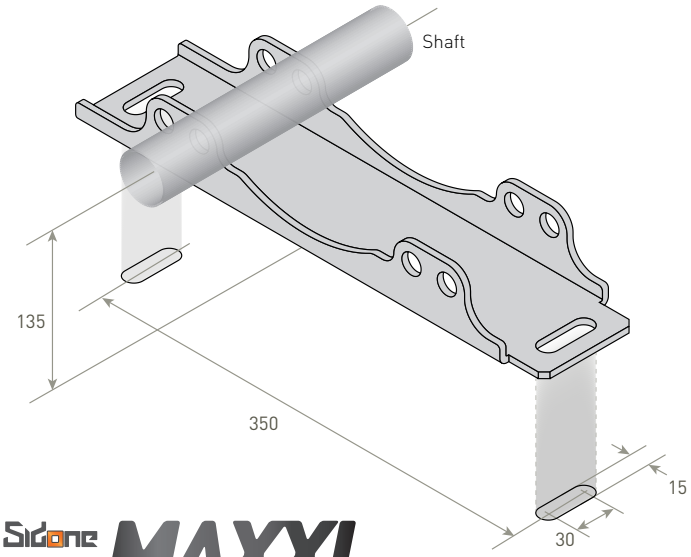

Sidone MAXXI

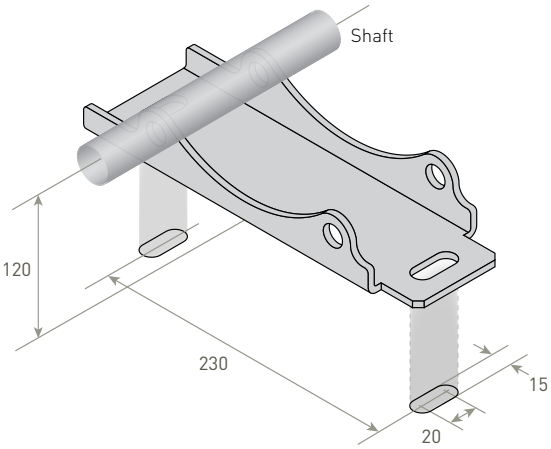

Sidone MIDI

OVERRIDE OPTIONS

Hand crank

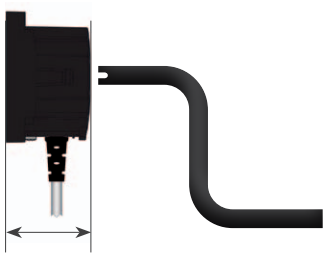

53 mm

Hand chain override

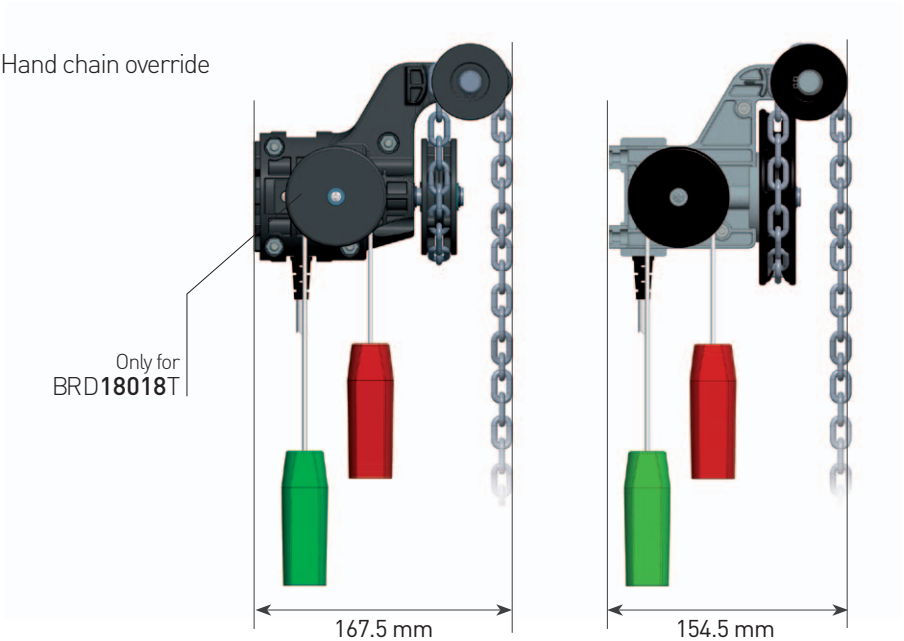

BASIC DIAGRAMS

VERTICAL INSTALLATION

Motors BRD18018T
BRD25012M

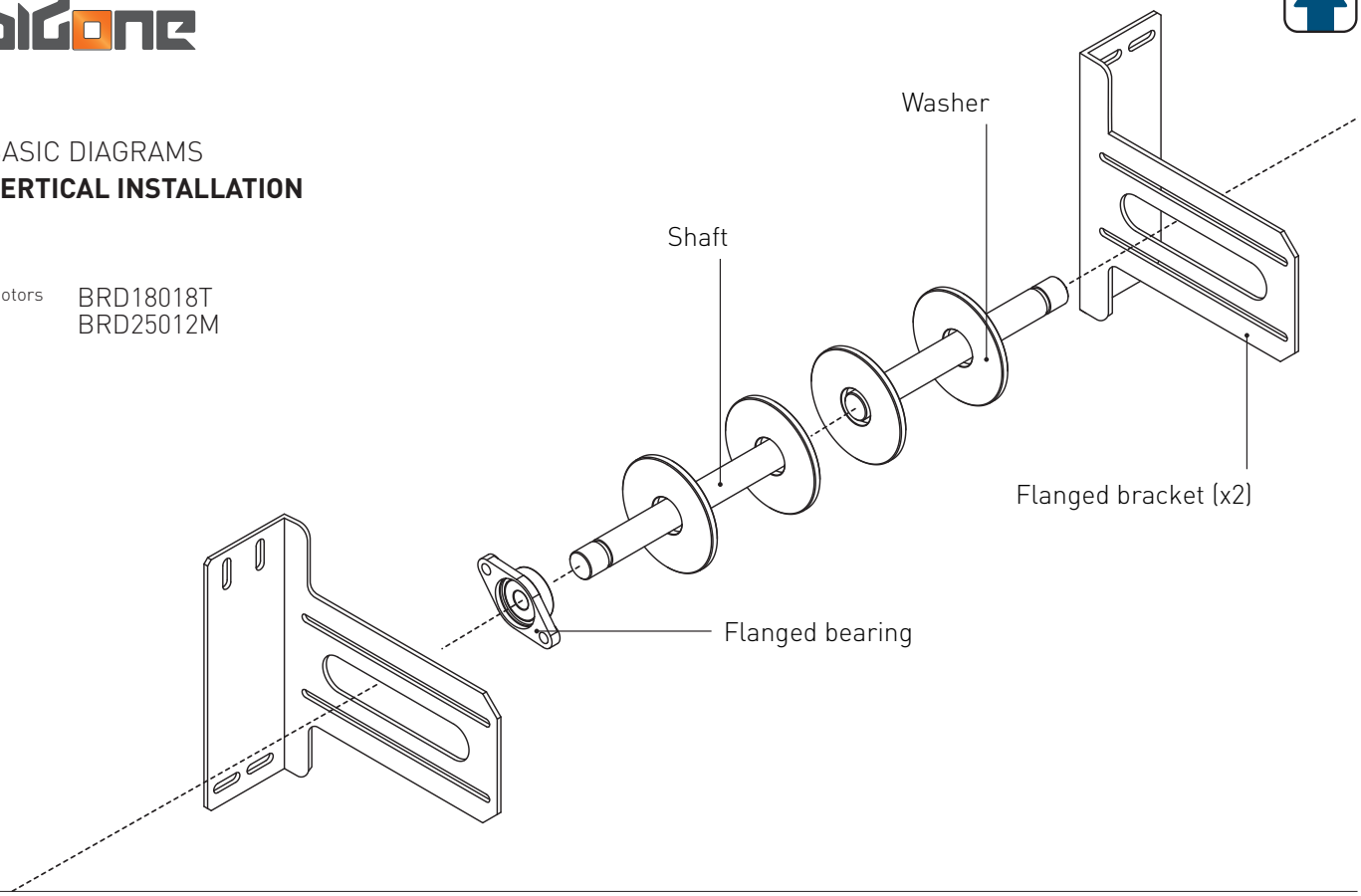

BASIC DIAGRAMS

HORIZONTAL INSTALLATION

Motors	BRD18018T BRD25012M BRD25012T BRD25018T BRD25036T	LP40014T LP55012T LP65012T LP25060T LP45035T	LP75015T LP100010T LP14008T	LP18006T
Accessories	ASOM (2x) + ASOMBP	ASOM (2x)	ASOMX + ASOM	ASOMKS (2x)
Bearings	ALS3	ALS4	ALS55	ALS60

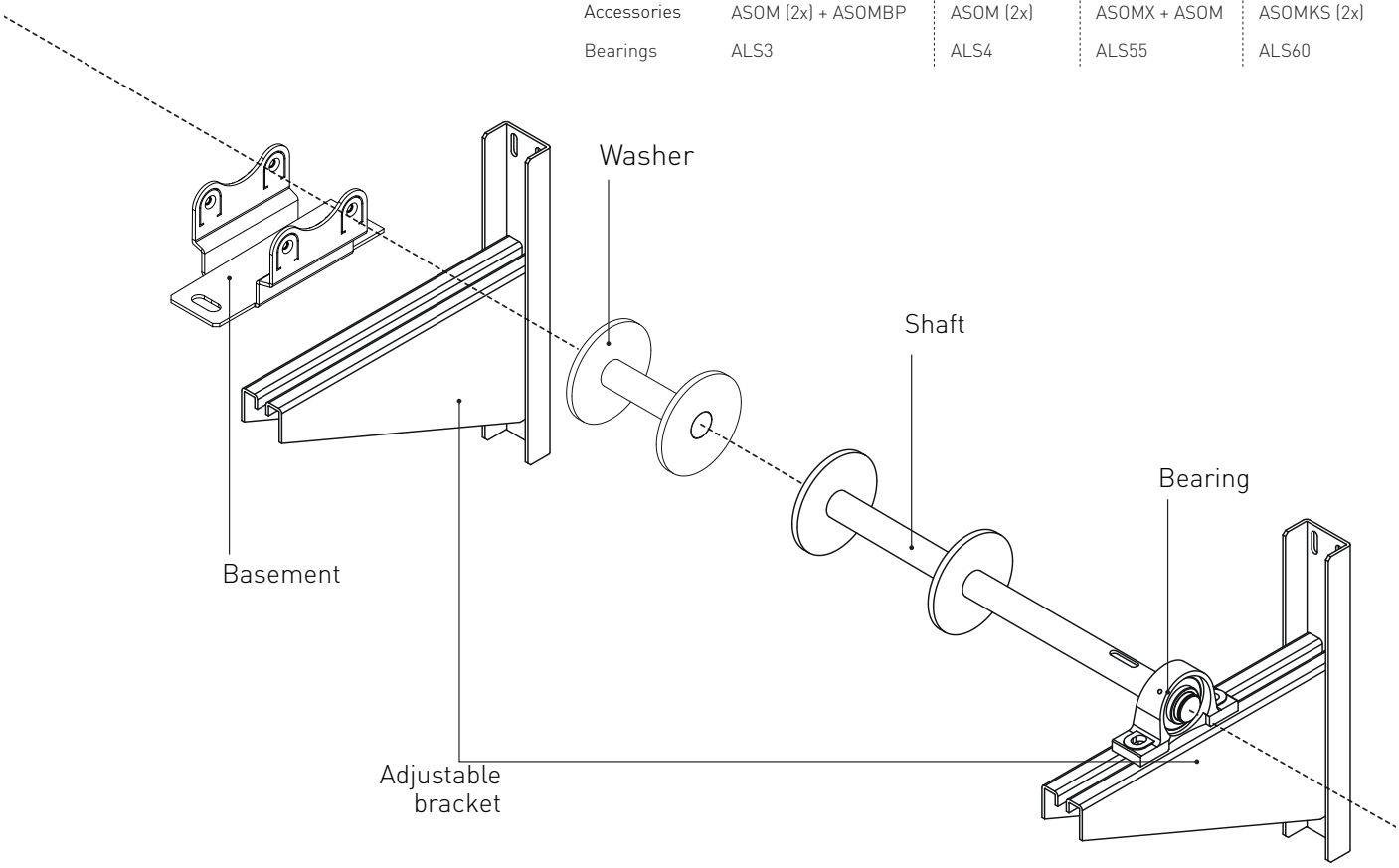

ACCESSORIES

		BRD**18018**T BRD**25012**M BRD**25012**T BRD**25018**T BRD**25036**T	LP**40014**T LP**55012**T LP**65012**T LP**25060**T LP**45035**T	LP**75015**T LP**100010**T LP**14008**T	LP**18006**T
ACCESSORIES					
ASOMCL	Hand-chain override	■	LP40014T		
ASOMC	Hand-chain override		■		
ASOMC.70	Hand-chain override - Height 7 m		■	■	
ASOMCX.70	Hand-chain override - Height 7 m			■	■
ASOMBP	Basement	■			
ASOMLP	Flanged bracket	■			
ASOMVER	Vertical bracket		■		
ASOM	Adjustable bracket	■	■		
ASOMX	Adjustable bracket - motor side			■	
ASOMKS	Adjustable bracket				■
ASOMSIDO	Sidone/Midi basement adapter		■		
ASOMMINI	Miniside/Midi basement adapter		■		
BRACKET BEARINGS					
ALS3F	ø 30 mm (flanged)	■			
ALS3	ø 30 mm	■			
ALS4	ø 40 mm		■		
ALS55	ø 55 mm			■	
ALS6	ø 60 mm				■
SHAFTS					
ALM3.SF	ø 30 mm - motor side - 8x7x100 mm feather key- 30 mm circlip	■			
ALP3.SF	ø 30 mm - bearing side - 8x7x50 mm feather key - 30 mm circlip	■			
ALM4.SF	ø 40 mm - motor side- 12x8x100 mm feather key - 40 mm circlip		■		
ALM55.SF	ø 55 mm - motor side - 16x10x125 mm feather key - 55 mm circlip			■	
ALM6.SF	ø 60 mm - motor side - 18x11x125 mm feather key - 60 mm circlip				■
WASHERS [1]					
AL3101.SF	for 101,1x3,6 ø tube - 30 mm shaft	■			
AL3133.SF	for 133x4,0 ø tube - 30 mm shaft	■			
AL3159.SF	for 159x4,5 ø tube - 30 mm shaft	■			
AL3168.SF	for 168,3x4,5 ø tube - 30 mm shaft	■			
AL3178.SF	for 177,8x5,0 ø tube - 30 mm shaft	■			
AL3193.SF	for 193,7x5,4 ø tube - 30 mm shaft	■			
AL4133.SF	for 133x4,0 ø tube - 40 mm shaft		■		
AL4159.SF	for 159x4,5 ø tube - 40 mm shaft		■		
AL4168.SF	for 168,3x4,5 ø tube - 40 mm shaft		■		
AL4178.SF	for 177,8x5,0 ø tube - 40 mm shaft		■		
AL4193.SF	for 193,7x5,4 ø tube - 40 mm shaft		■		
AL4219.SF	for 219,1x5,9 ø tube - 40 mm shaft		■		
AL4244.SF	for 244,5x6,3 ø tube - 40 mm shaft		■		
AL4273.SF	for 273,0x6,3 ø tube - 40 mm shaft		■		
AL4298.SF	for 298,5x7,1 ø tube - 40 mm shaft		■		
AL4323.SF	for 323,9x7,1 ø tube - 40 mm shaft		■		
AL55193.SF	for 193,7x5,4 ø tube mm - 55 mm shaft			■	
AL55219.SF	for 219,1x5,9 ø tube mm - 55 mm shaft			■	
AL55244.SF	for 244,5x6,3 ø tube mm - 55 mm shaft			■	
AL55298.SF	for 298,5x7,1 ø tubemm - 55 mm shaft			■	
AL55323.SF	for 323,9x7,1 ø tube mm - 55 mm shaft			■	
AL6193.SF	for 193,7x5,4 ø tube mm - 60 mm shaft				■
AL6219.SF	for 219,1x5,9 ø tube mm - 60 mm shaft				■
AL6244.SF	for 244,5x6,3 ø tube mm - 60 mm shaft				■
AL6298.SF	for 298,5x7,1 ø tubemm - 60 mm shaft				■
AL6323.SF	for 323,9x7,1 ø tube mm - 60 mm shaft				■

[1] Further dimensions and diameters are available upon request.

SELECTION TABLE

The selection table already considers a 20% friction for single wall shutters. It is necessary to add a further friction percentage for double wall shutters and relevant slat thickness.

Tube = Ø x thickness (mm)
H = Shutter's height (m)

Special drives for high-speed roller shutters

Tube		BRD**18018**T	BRD**25012**T/M BRD**25018**T BRD**25036**T	LP**40014**T	LP**55012**T	LP**65012**T	LP**25060**T	LP**45035**T
	H (m)	Max Kg	Max Kg	Max Kg	Max Kg	Max Kg	Max Kg	Max Kg
101.6 x 3.6 mm	3	206	286				264	
	5	177	246				220	
	7	155	216				187	
	10	116	161				127	
108 x 3.6 mm	3	194	269				249	
	5	166	231				207	
	7	146	203				176	
	10	109	151				119	
133 x 4.0 mm	3	188	261	417	573	678	248	469
	5	163	226	362	497	588	210	407
	7	149	207	331	455	538	189	372
	10	117	163	261	358	423	141	293
139.7 x 3.0 mm	3	179	248	397	546	645	236	447
	5	155	215	344	474	560	200	387
	7	142	197	315	433	512	180	355
	10	112	155	248	341	403	134	279
159 x 4.5 mm	3	171	237	380	522	617	229	427
	5	155	215	344	472	558	204	387
	7	143	199	318	437	517	187	358
	10	121	168	269	370	437	153	302
168 x 4.5 mm	3	168	234	374	514	607	227	420
	5	153	212	340	467	552	203	382
	7	140	194	311	427	505	183	349
	10	118	164	263	362	428	151	296
177.8 x 5.4 mm	3	159	221	353	486	574	214	397
	5	144	201	321	441	522	192	361
	7	132	183	294	404	477	173	330
	10	112	155	249	342	404	142	280
193.7 x 5.4 mm	3	150	208	333	457	540	197	374
	5	138	192	307	423	499	176	346
	7	127	176	282	388	458	159	317
	10	110	153	244	336	397	131	275
219.1 x 5.9 mm	3			294	404	478		331
	5			272	374	442		306
	7			249	343	405		281
	10			216	297	351		243

Tube		LP**75015**T	LP**100010**T	LP**14008**T	LP**18006**T
	H (m)	Max Kg	Max Kg	Max Kg	Max Kg
159 x 4.5 mm	3	712			
	5	644			
	7	596			
	10	504			
168 x 4.5 mm	3	701			
	5	637			
	7	582			
	10	493			
177.8 x 5.4 mm	3	662	883	1236	
	5	602	803	1124	
	7	550	734	1027	
	10	466	621	870	
193.7 x 5.4 mm	3	624	831	1164	1497
	5	576	768	1076	1383
	7	529	705	987	1269
	10	458	610	855	1099
219.1 x 5.9 mm	3	551	735	1029	1323
	5	509	679	951	1223
	7	468	623	873	1122
	10	405	540	756	971
244.5 x 6.3 mm	3	500	667	934	1201
	5	469	625	876	1126
	7	432	575	805	1036
	10	380	507	710	913
273 x 7.0 mm	3	448	597	836	1075
	5	420	560	784	1008
	7	386	515	721	928
	10	341	454	636	817
298.5 x 7.1 mm	3	410	546	765	984
	5	384	512	717	922
	7	353	471	660	848
	10	311	415	581	747
323.9 x 7.1 mm	3		504	705	906
	5		472	661	850
	7		434	608	782
	10		383	536	689



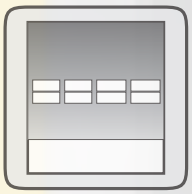

RAPID DOORS

With a speed up to 180rpm, the **Rapido range** of drives is the ideal solution for the rapid doors' market, offering a wide range of operators with several combinations of torque and speed. To grant the highest degree of safety each motor is equipped with an electromagnetic brake and an integrated safety brake. Special versions with high torque are available also for high-speed rolling shutters.

RAPIDO bbs

RAPIDO BRD

RAPIDO bbs

Ultra-compact model with front brake and integrated safety brake.

BBS 50180 □□ME
BBS 6090 □□ME
BBS 60130 □□ME
BBS 7045 □□ME

ø HOLLOW SHAFT

- / 30 mm (Standard)
- V 25 mm (Optional)
- P 25.4 mm (Optional)

LIMIT SWITCH OPTIONS

- E Digital Limits

OVERRIDE OPTIONS

- M Hand Crank

POWER SUPPLY[1]

- T 3~ 400V
- R 3~ 230V

[1] It is possible for the installer to independently convert the connection of the gearmotor power supply from star (400V) to triangle (230V) and vice versa.

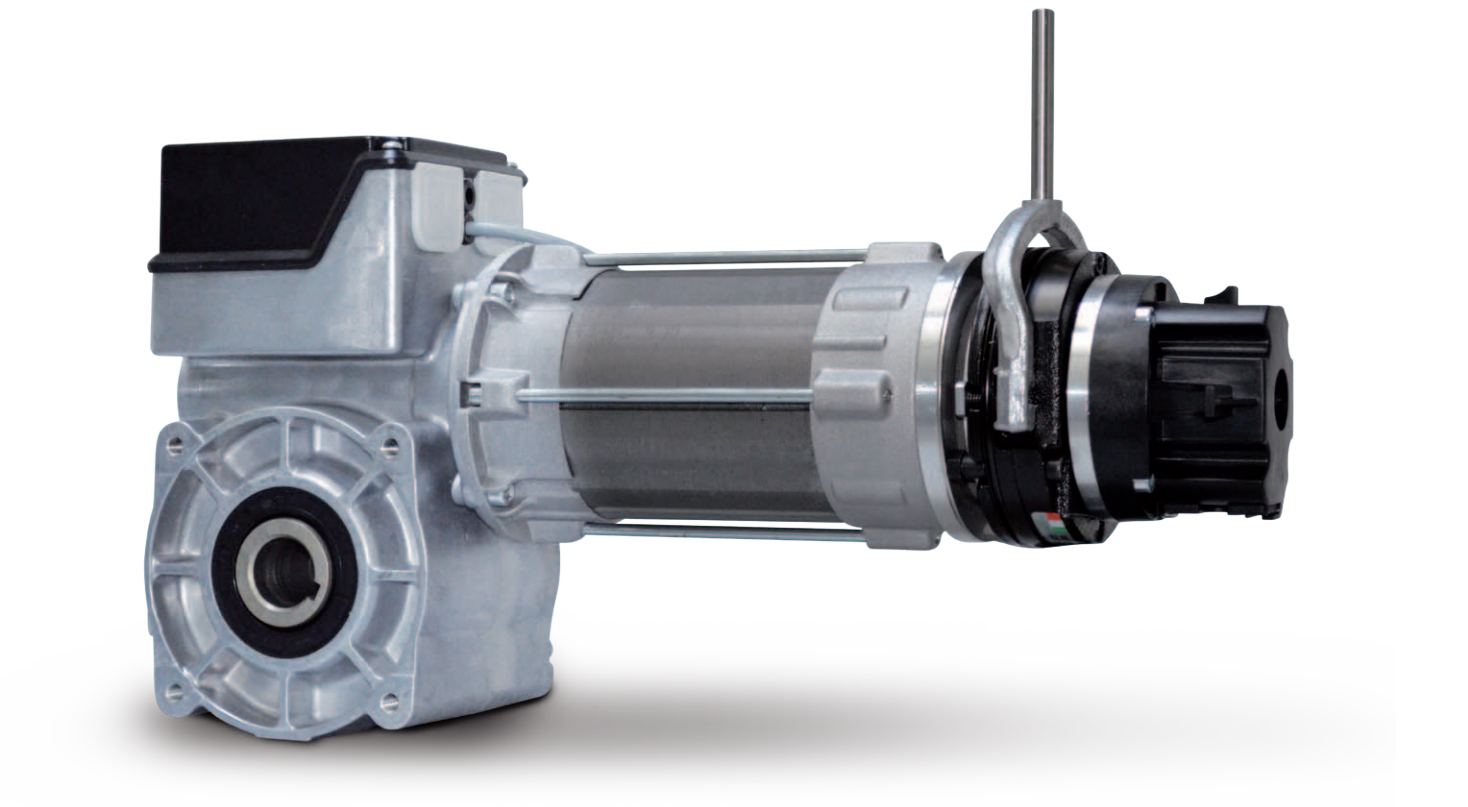

RAPIDO BRD

All models are provided with an electromagnetic brake which stops suddenly the inertia of the motor.

BRD 40130 ▢▢M▢
BRD 50180 ▢▢M▢
BRD 6090 ▢▢M▢
BRD 60130 ▢▢F▢
BRD 7045 ▢▢M▢
BRD 9090 ▢▢M▢
BRD 12045 ▢▢M▢
BRD 120140 ▢▢M▢
BRD 18090 ▢▢M▢

ø HOLLOW SHAFT

- / 30 mm (Standard)
- V 25 mm (Optional)
- P 25.4 mm (Optional)

LIMIT SWITCH OPTIONS

- M Mechanical Limits
- E Digital Limits

OVERRIDE OPTIONS

- M Hand Crank
- F Hand Crank Motor side brake

POWER SUPPLY [1]

- T 3~ 400V
- R 3~ 230V

[1] It is possible for the installer to independently convert the connection of the gearmotor power supply from star (400V) to triangle (230V) and vice versa.

TÜV SÜD Certificate:
TorFV 24/197

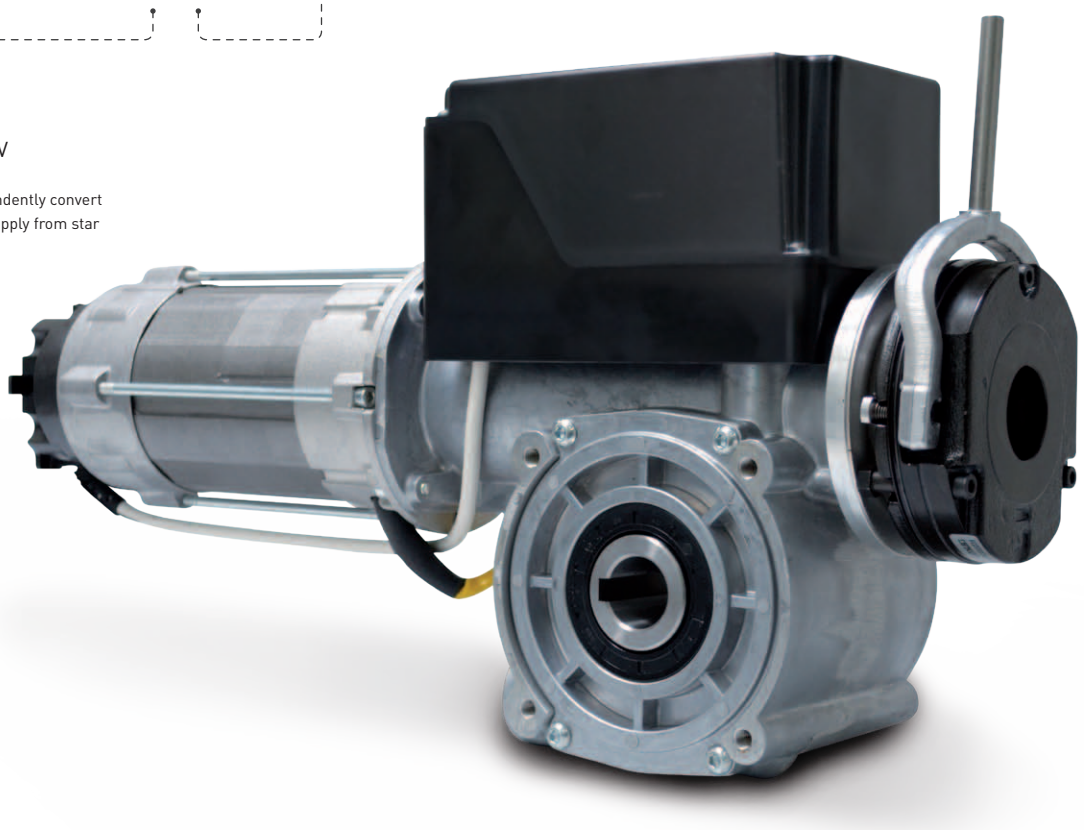

OVERRIDE OPTION

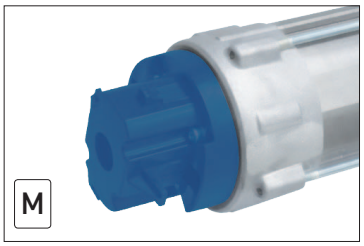

Hand crank

LIMIT SWITCH OPTIONS

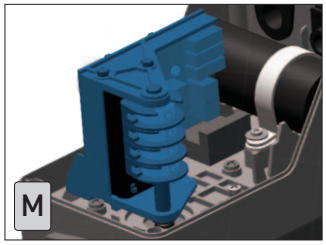

Mechanical limits

2 Green cams for operating limits.
2 Red cams for safety limits.
2 Yellow cams for auxiliary controls

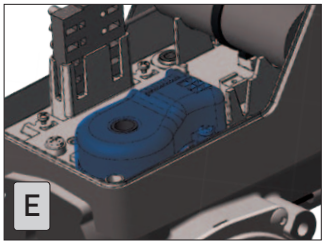

Digital limits

Absolute encoder
No readjustment after power failure
(necessary if a control unit with inverter is used)

INSTALLATION TYPE

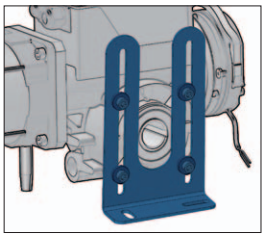

Flange bracket

ANSZXM

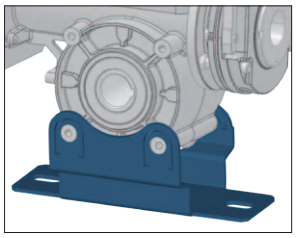

Basement

AS0MBP

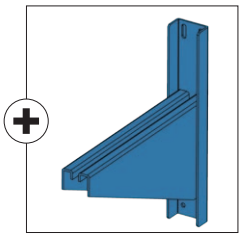

Bracket

AS0M

ADDITIONAL DETAILS

European directives
RAPIDO is made in accordance with product standards EN 13241-1 Doors- and EN 12453 Safety for power operated doors.

Duty rating
There is a relation between the weight of the door and the number of movements per hour so the motor duty rating varies according to the door weight.

Overload safety factor
Motor overload safety factor = 4 x the nominal motor amperage because the starting current of the RAPIDO can reach these levels for short periods.

Output speed
The maximum admissible speed depends on the construction and the door type.
The admissible closing speed shall be tuned so to let the operating forces comply with the EN 12453.

Manual operation
Rapido is supplied with hand crank for manual operation when power cuts off.

TECHNICAL DETAILS

	BRD40130RM		BBS50180RM BRD50180RM		BBS6090RM BRD6090RM	
Torque (Nm)	40		50		60	
Output Speed (rpm)	130		180		90	
Mechanical power (kW)	0.6		1.0		0.6	
Power Supply (V~) [1]	3~ 400	3~ 230	3~ 400	3~ 230	3~ 400	3~ 230
Absorption (A)	2.69	4.85	2.69	4.44	2.21	4.08
Frequency (Hz)	50		50		50	
Max Cycles Per Hour	45		45		45	
Limit Switch max turns [2]	18		18		18	
Working temperature [3]	-20°C/+60°C		-20°C/+60°C		-20°C/+60°C	
Protection Rate	IP54		IP54		IP54	
GAPOSA control unit recommended	QC600 [4]		QC600S [4]		QC600 [4]	

	BBS60130RM BRD60130RM		BBS7045RM BRD7045RM		BRD9090RM	
Torque (Nm)	60		70		90	
Output Speed (rpm)	130		45		90	
Mechanical power (kW)	1.0		0.6		1.0	
Power Supply (V~) [1]	3~ 400	3~ 230	3~ 400	3~ 230	3~ 400	3~ 230
Absorption (A)	2.29	4.1	2.02	3.6	2.5	4.6
Frequency (Hz)	50		50		50	
Max Cycles Per Hour	45		30		45	
Limit Switch max turns [2]	18		18		18	
Working temperature [3]	-20°C/+60°C		-20°C/+60°C		-20°C/+60°C	
Protection Rate	IP54		IP54		IP54	
GAPOSA control unit recommended	QC600 [4]		QC600 [4]		QC600S [4]	

	BRD12045RM		BRD120140TM		BRD18090TM	
Torque (Nm)	120		120		180	
Output Speed (rpm)	45		140		90	
Mechanical power (kW)	0.92		2.0		2.2	
Power Supply (V~) [1]	3~ 400	3~ 230	3~ 400	3~ 230	3~ 400	3~ 230
Absorption (A)	2.3	4.4	3.77	6.7	4.5	7.6
Frequency (Hz)	50		50		50	
Max Cycles Per Hour	30		45		45	
Limit Switch max turns [2]	18		18		18	
Working temperature [3]	-20°C/+60°C		-20°C/+60°C		-20°C/+60°C	
Protection Rate	IP54		IP54		IP54	
GAPOSA control unit recommended	QC600S [4]		QC600S [4]		QC600W	

[1] Highlighted the default electrical connection diagram.

[2] A higher limit switch range is available upon request

[3] Nominal values are fully respected within a temperature range -10°C/+40°C. In case of harsh temperatures there might be a performance drop on the declared values.

[4] The power supply connection of the gear motor must be in a delta shape (3~230V).

ø HOLLOW SHAFT

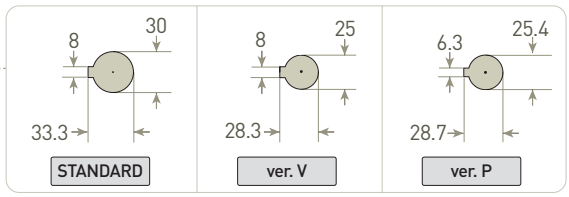

BRD**60130**RF

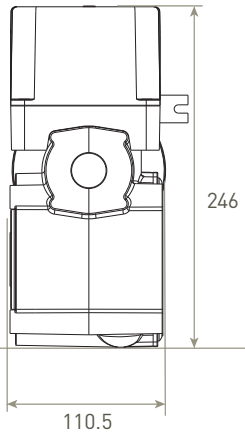

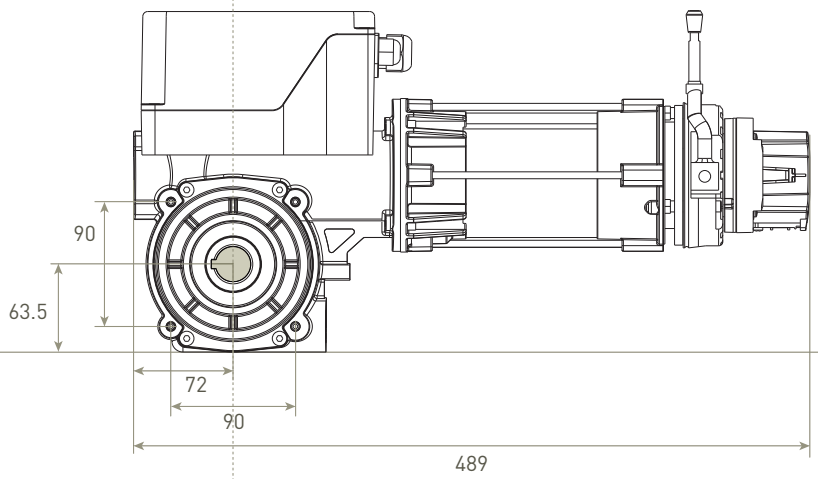

BRD**7045**RM

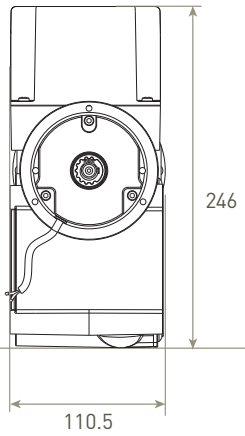

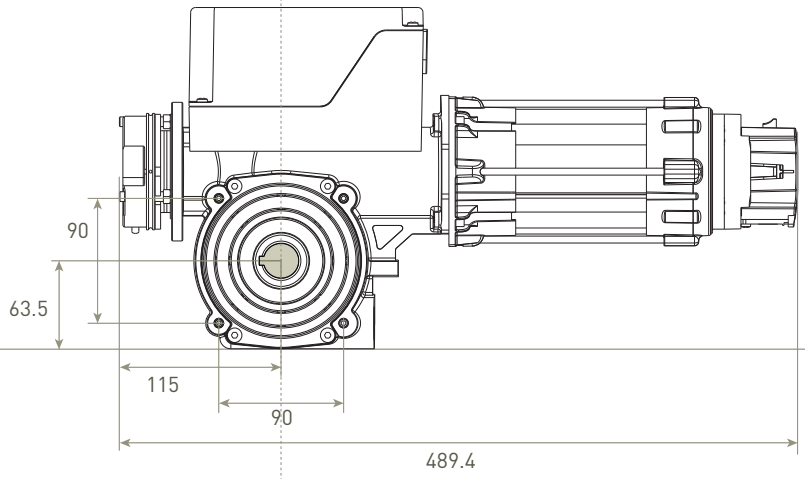

BRD**9090**RM / BRD**12045**RM

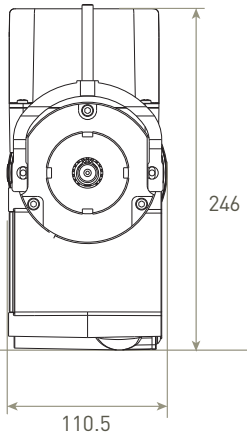

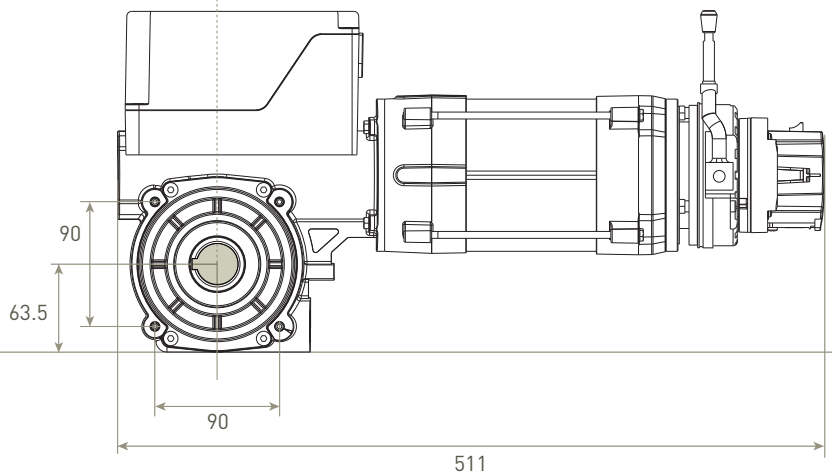

ø HOLLOW SHAFT

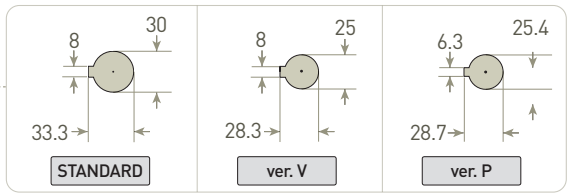

BBS**60130**RM

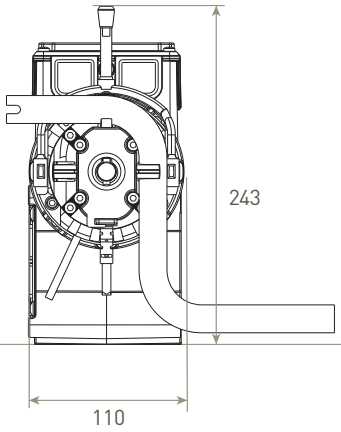

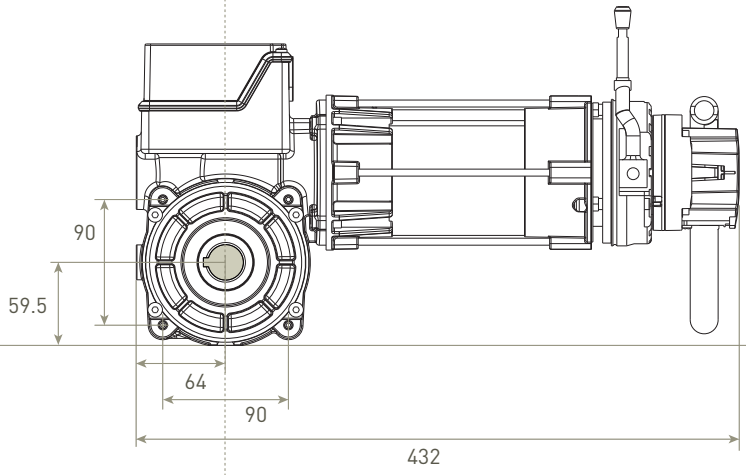

BBS**7045**RM

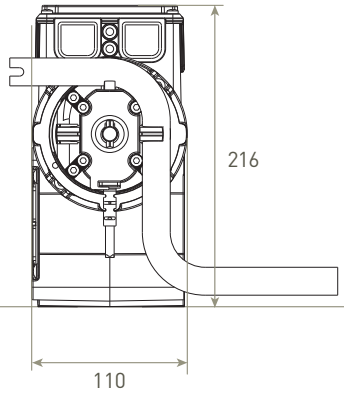

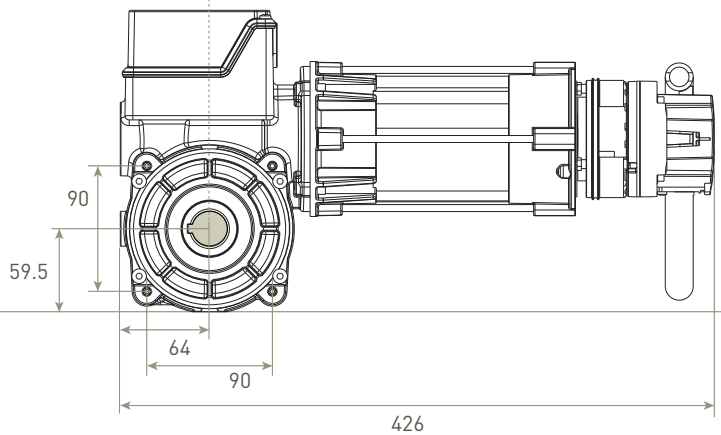

ø HOLLOW SHAFT

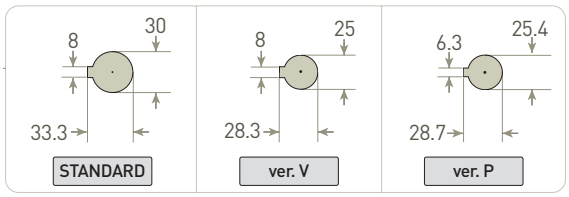

BRD**40130**RM

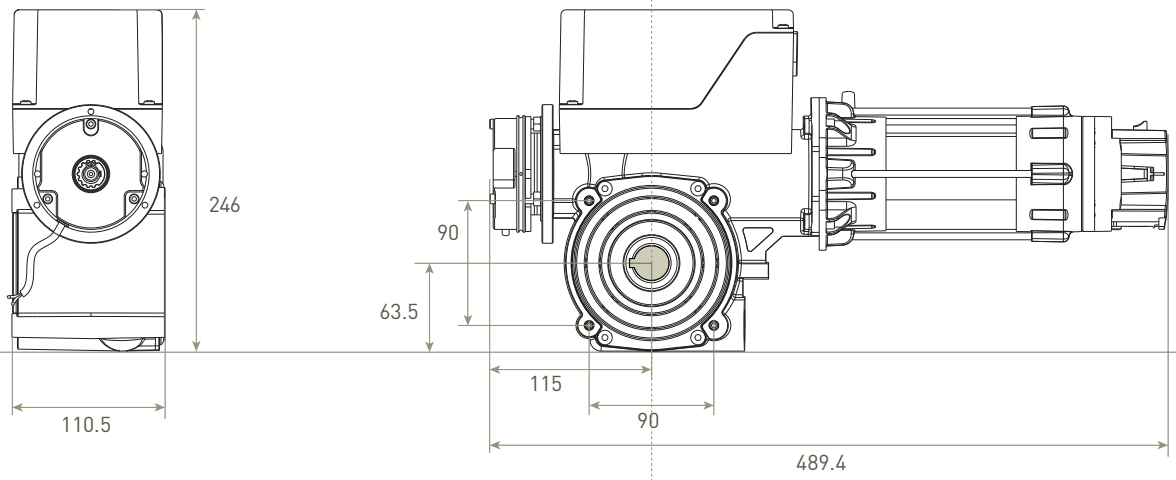

BRD**50180**RM

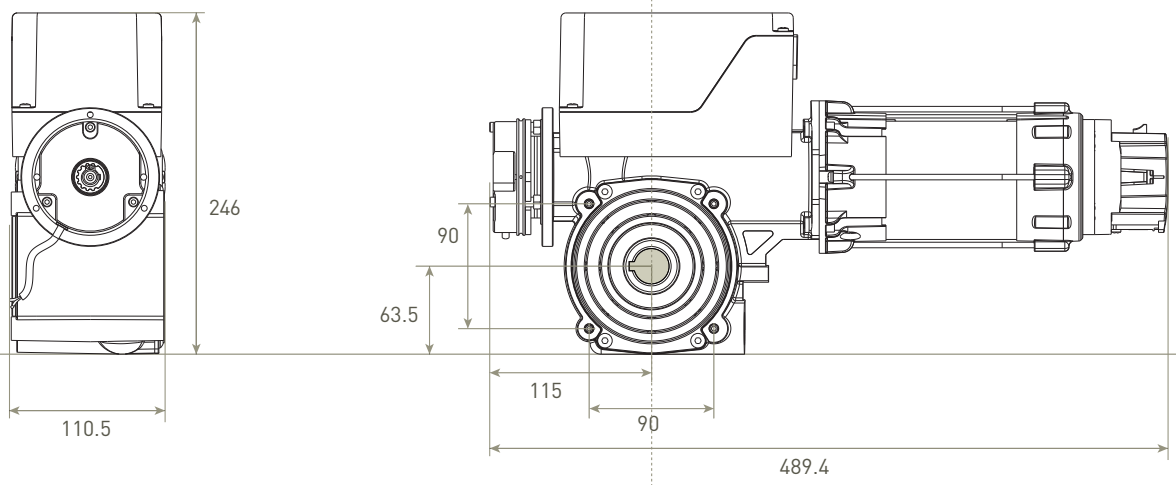

BRD**6090**RM

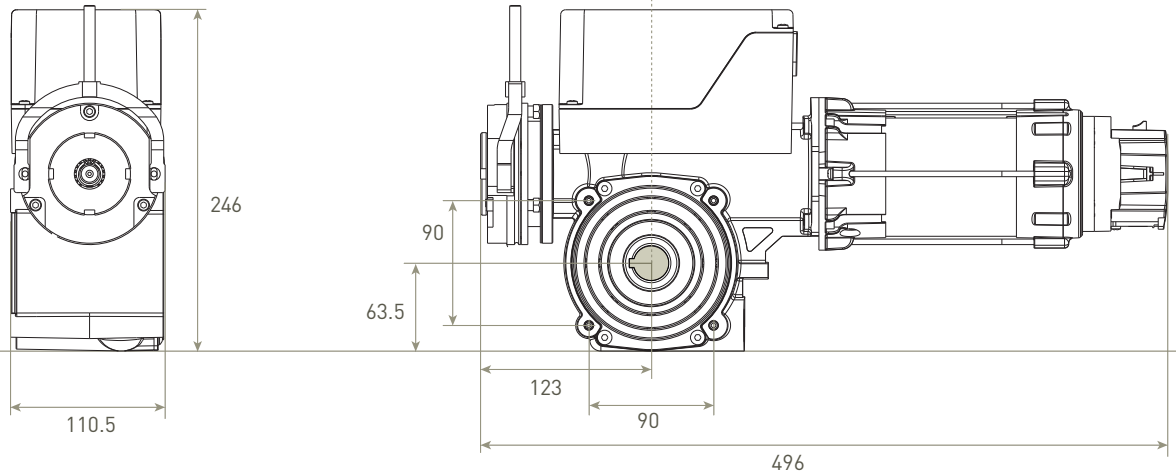

ø HOLLOW SHAFT

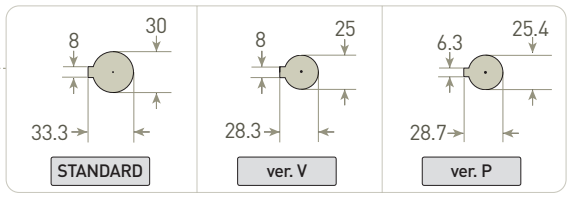

BRD**60130**RF

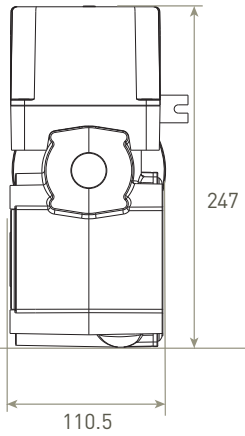

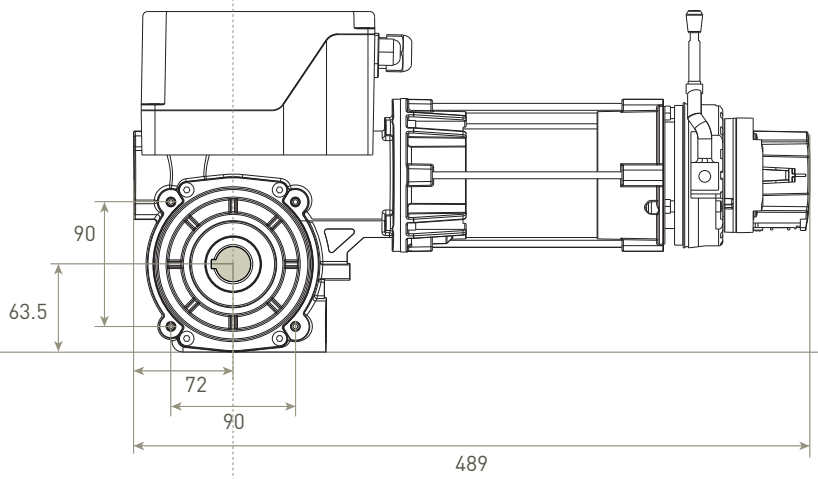

BRD**7045**RM

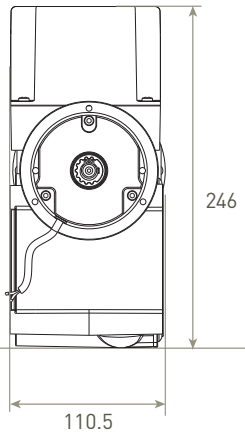

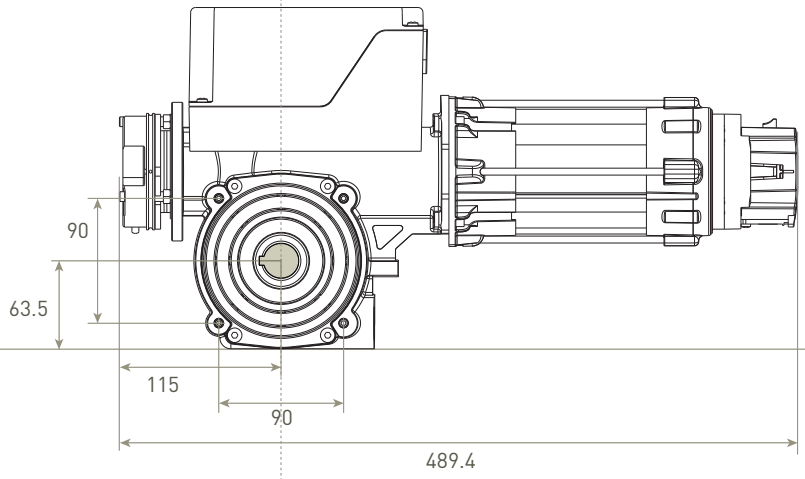

BRD**9090**RM / BRD**12045**RM

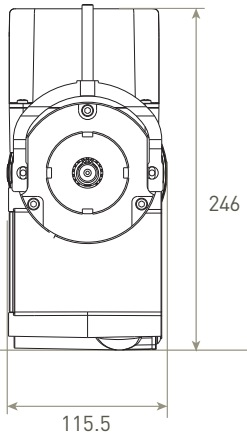

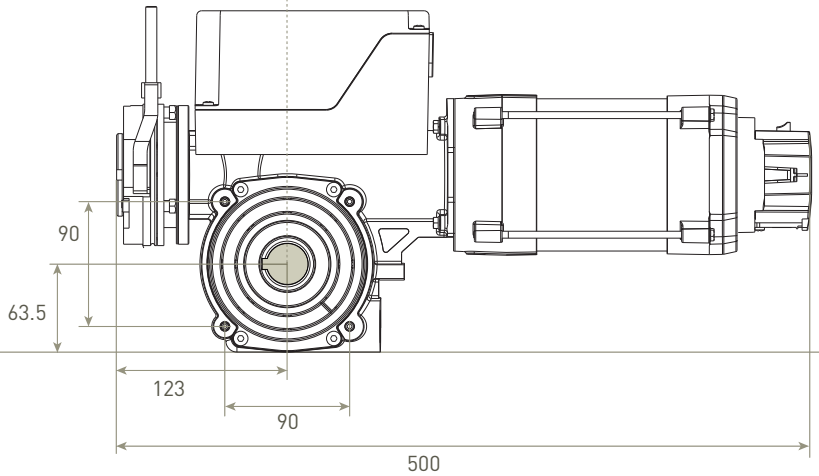

ø HOLLOW SHAFT

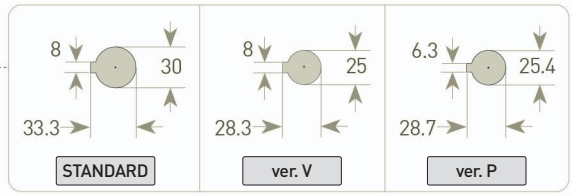

BRD**120140**TFM

Front brake

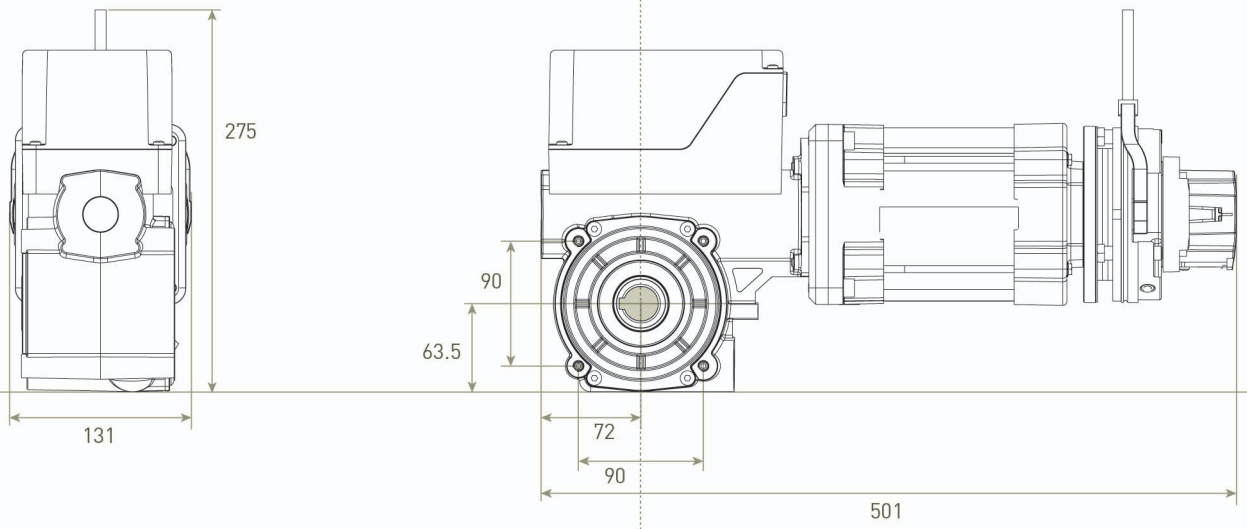

BRD**18090**TFM

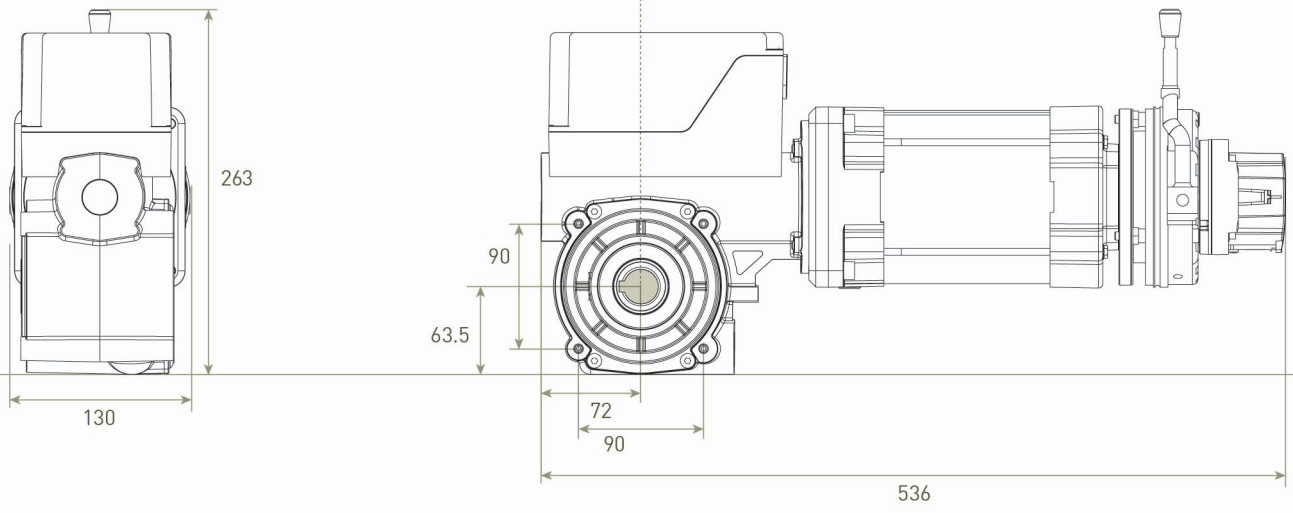

OVERRIDE OPTIONS

Hand crank

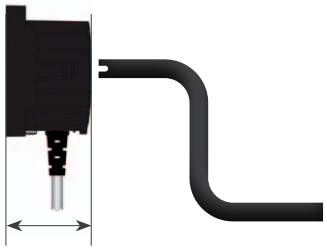

53 mm

BASEMENT

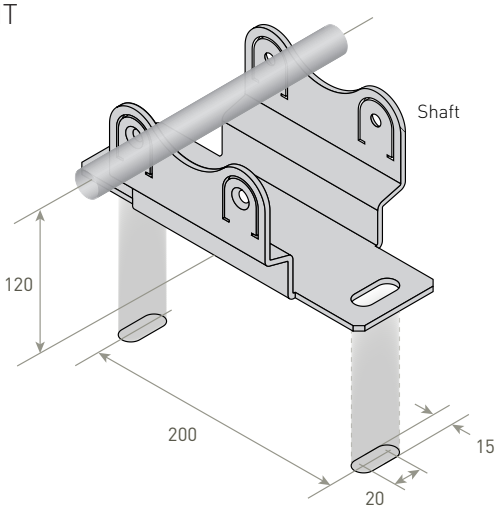







GAPOSA

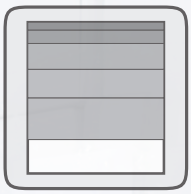

SECTIONAL DOORS

For the industrial sectional door market we offer a numbers of solutions: **BHS** is the standard motor option, very versatile given the multiple different configurations in terms of torque, limit switch and override. **BHS Completo** is a stand-alone solution, with an integrated control board, pre-wired pushbutton and digital limits. **BBS** is the newest and most compact motor design, offered as a complete kit including control panel, cables and accessories.

bhs bhs completo Kit bbs



bhs

The self-braking worm gear makes the BHS irreversible.

BHS **70** M
BHS**100** T
BHS**120** T C
BRD**140** T

OVERRIDE OPTIONS

- **D** Declutch device (Only for BHS70/100)
- **M** Hand Crank
- **O** Hand Crank with eyelet (Only for BHS70/100)
- **C** Hand Chain Override

LIMIT SWITCH OPTIONS

- **M** Mechanical Limits
- **E** Digital Limits
- **H** Mechanical Limits 3 Cams (only for BHS70M)
- **I** With integrated control unit (only for BHS70M)
  - Low voltage auxiliary microswitch outputs
  - Choice of:
    1. Opening and closing > dead man
    2. Opening >automatic
       Closing > dead man

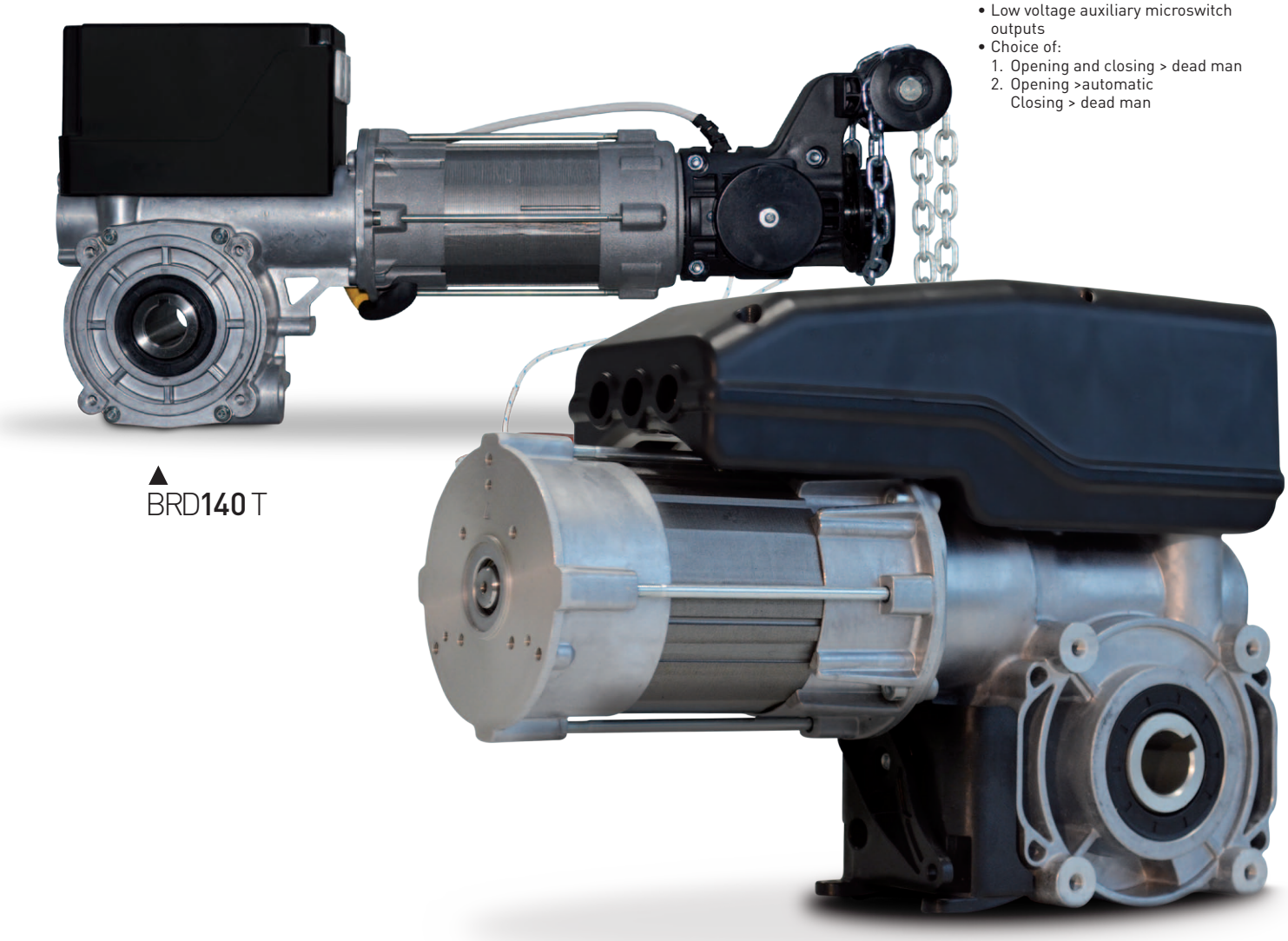

▲ BRD**140** T

bhs completo

Motor for springs-balanced sectional doors with integrated control panel, digital limits and pre-wired pushbutton with 7 m cable.

BHS **70** M ☐ ☐
BHS **100** T ☐ ☐
BHS **120** T C ☐

OVERRIDE OPTIONS

- **D** Declutch device (Only for BHS70/100)
- **C** Hand Chain Override

TYPE OF INTEGRATED CONTROL PANEL

- **B** With **BASIC** control panel and digital limits
- **F/L** With **MULTIFUNCTION** control panel and digital limits*

*Ver. L not available on BHS70

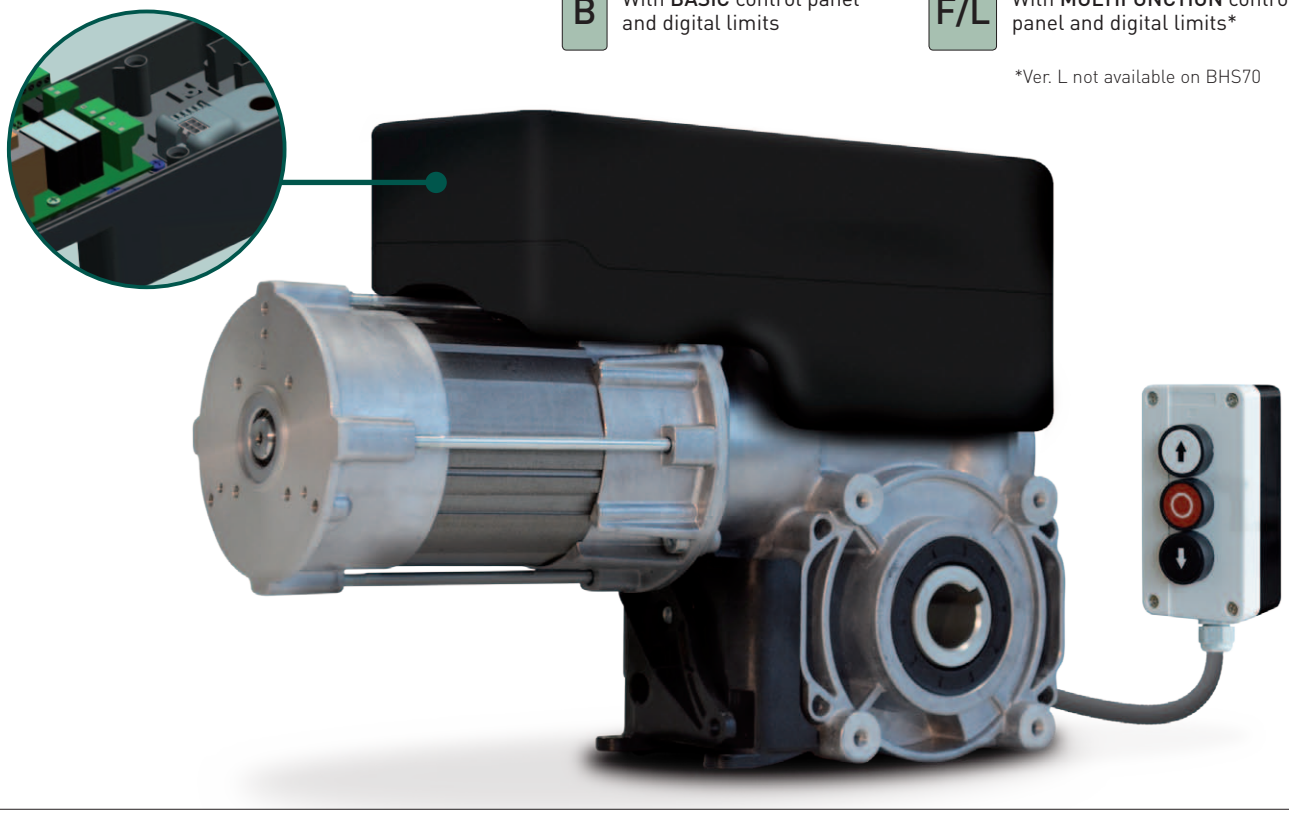

FUNCTIONS OF INTEGRATED CONTROL PANELS

	Version BASIC (B)	Version MULTIFUNCTION (F)	Version MULTIFUNCTION (L)
Automatic opening	■	■	■
Automatic closing		■	■
Standard safety beams QCF4 / QCF5		■	■
Optoelectric safety edge QCSE2		■	
Safety edge 8k2		■	
FSS Light curtain			■
Traffic lights		■	■
24Vac contact	■	■	■
Radio control		**Optional** (QCMORAD - 433,92 Mhz Radio module)	

OVERRIDE OPTIONS

Declutch device

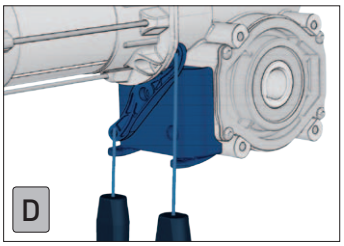

Hand crank

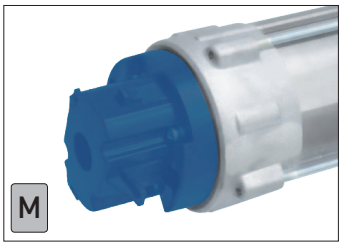

Hand crank with eyelet

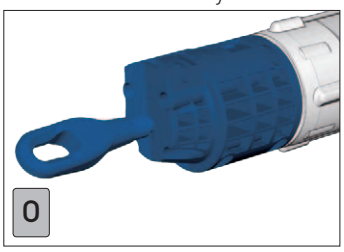

Hand chain override

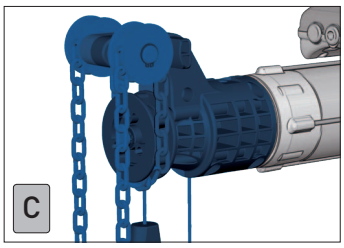

INSTALLATION TYPE

M8 fitting thread

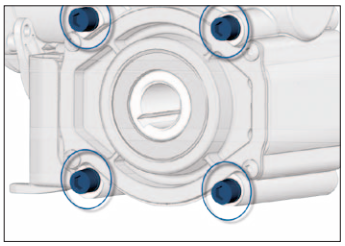

Bracket ANSZXM

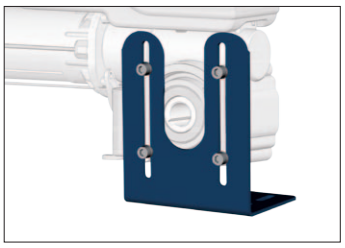

LIMIT SWITCH OPTIONS

Mechanical limits

2 Green cams for operating limits
2 Red cams for safety limits
2 Yellow cams for auxiliaries

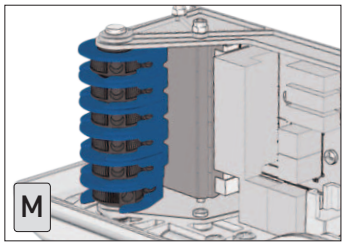

Mechanical limits

3 Cams in 1ph motors

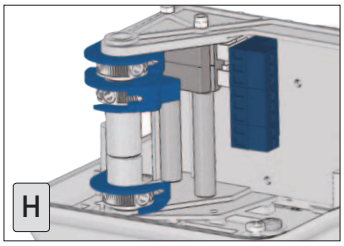

Digital limits

Absolute encoder
No readjustment after power failure

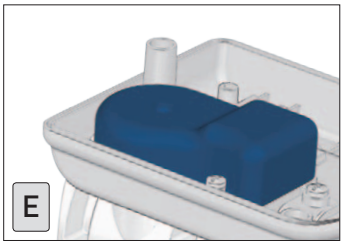

Integrated control unit

3 Cams in 1ph motors
Outputs of the low-voltage auxiliary microswitch
Possibility to choose between:
1. "Deadman" opening/closing
2. Automatic opening / "Dead man" closing

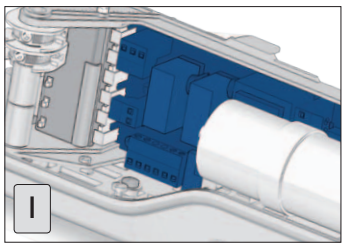

OPTIONAL

CHAIN TRANSMISSION KIT[1]

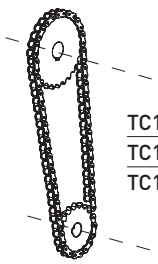

TC12S1	1/2" x 11.7 - ratio 1:1
TC12S15	1/2" x 11.7 - ratio 1:1.5
TC12S2	1/2" x 11.7 - ratio 1:2

[1] In view of the applied forces, in the presence of chain transmission kit it is strongly recommended to fix the motor on both sides using two ANSZXM flanged bracket

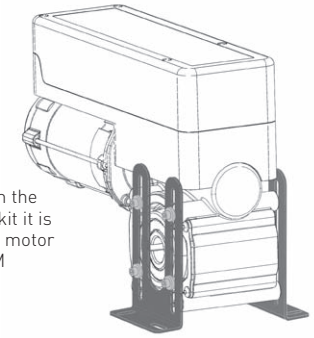

TECHINCAL DATA

	BHS70M	BHS100T	BHS120T	BRD140T
Torque (Nm)	70	100	120	140
Output Speed (rpm)	21	21	30	18
Mechanical power (kW)	0.2	0.3	0.6	0.6
Power Supply (V~)	1~ 230	3~ 400	3~ 400	3~ 400
Absorption (A)	3.0	1.60	2.13	2.08
Frequency (Hz)	50	50	50	50
Max Cycles Per Hour	12	20	20	20
Limit Switch max turns	18	18	18	18
Working temperature[1]	-20°C/+60°C	-20°C/+60°C	-20°C/+60°C	-20°C/+60°C
Protection Rate	IP54	IP54	IP54	IP54
Hollow shaft (mm)	25.4	25.4	25.4	25.4
Max. sectional door weight (Kg)	350	400	450	650
Holding torque (Nm)	450	450	450	500

[1] Nominal values are fully respected within a temperature range -10°C/+40°C. In case of harsh temperatures there might be a performance drop on the declared values.

Notes: Operating sound pressure level SPL<70 dB(A). The operating current in door drives can reach up to 4x the rated current for limited periods

ADDITIONAL DETAILS

European directives
BBS/BHS is made in accordance with product standards EN 13241-1 Doors- and EN 12453 Safety for power operated doors.

Duty rating
There is a relation between the weight of the door and the number of movements per hour so the motor duty rating varies according to the door weight.

Overload safety factor
Motor overload safety factor = 4 x the nominal motor amperage because the starting current of the BBS/BHS can reach these levels for short periods.

Output speed
The maximum admissible speed depends on the construction and the door type. The admissible closing speed shall be tuned so to let the operating forces comply with the EN 12453.

Manual operation
In installations of BBS/BHS with hand crank or hand chain override, the door and the self braking gear construction remain always inter-connected. The door will never fall down if a spring breaks.
In installations of BBS/BHS with decluth device the door and the self-braking worm gear are disconnected during the manual operation. In this case the worm gear no longer sustains the door and a spring safety brake is required.
The counter-balancing system should be inspected at least once a years.

Holding torque
The BBS/BHS drive unit is capable of holding the weight of the door when the spring breaks preventing the door from falling down. The holding capability is the admissible load the worm gear construction can bear.

SELECTING THE RIGHT OPERATOR

The calculations are based on a weight of a weight of the door leaf of 12,5 kg/m². In certain situations the friction can have influence, this has to be taken into account, by using a correction factor.
Furthermore, it is essential to have a proper spring balance for the correct movement of the door.

	Size of the door			
Motor	**25 m²**	**40 m²**	**45 m²**	**50 m²**
BHS70M	✓			
BBS/BHS100T		✓		
BHS120T			✓	
BRD140T				✓

bhs 70 bhs 100

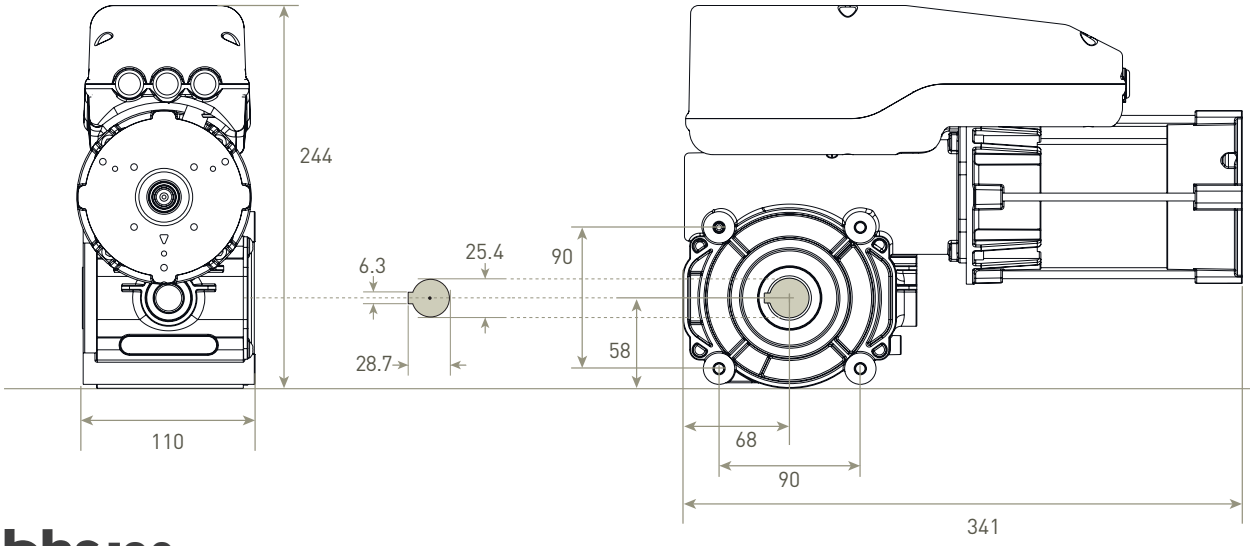

bhs 120

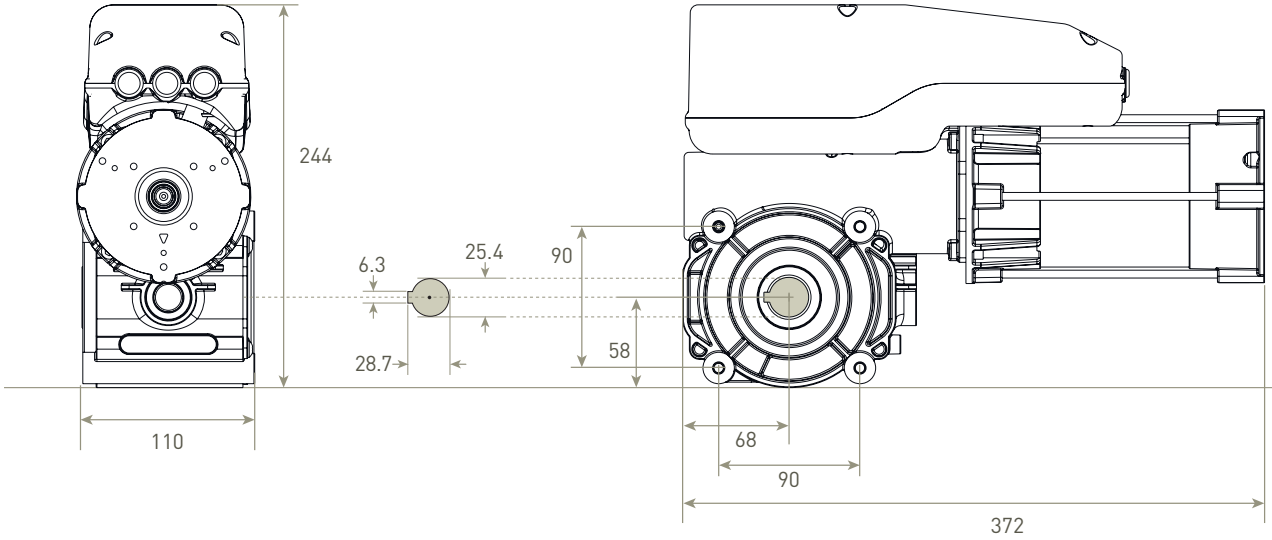

bhs BRD140T

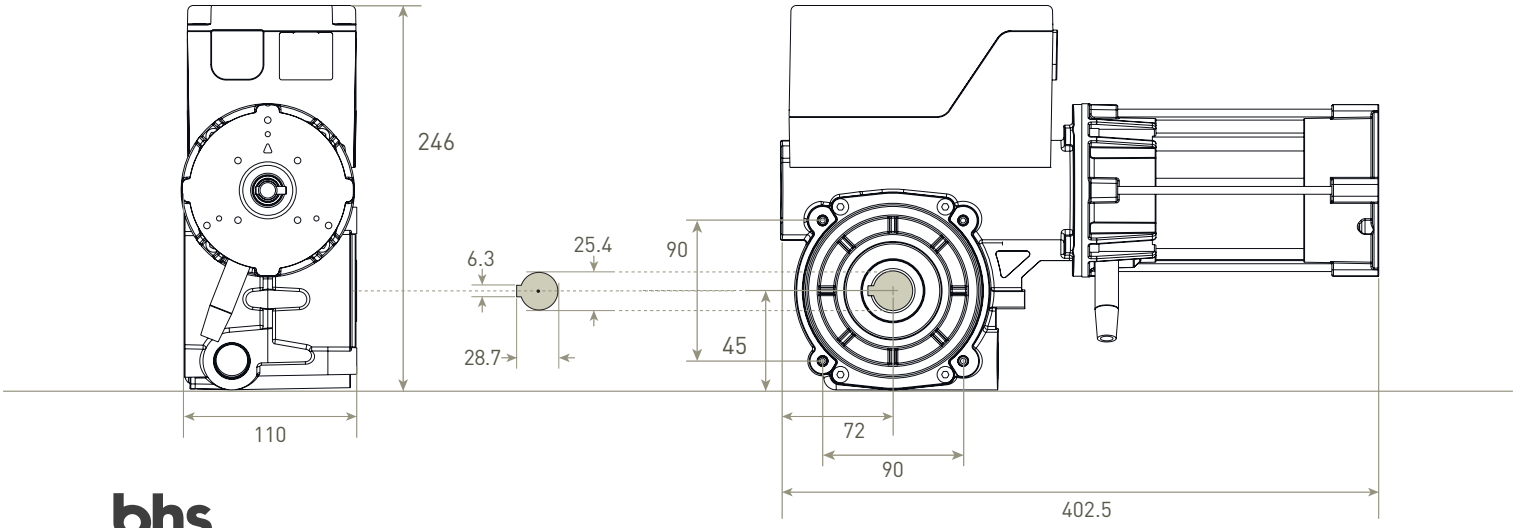

bhs completo

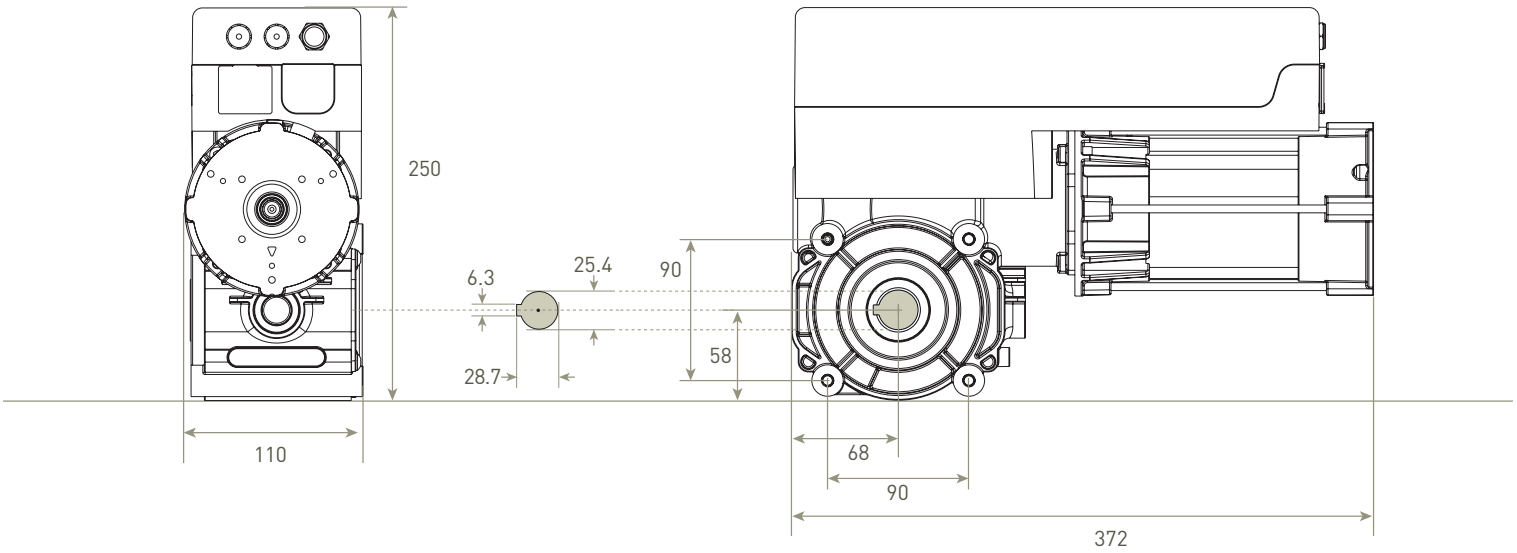

OVERRIDE OPTIONS

Hand crank

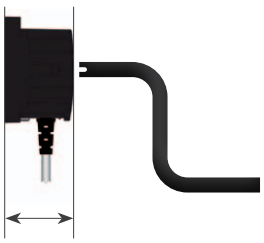

53 mm

Hand crank with eyelet

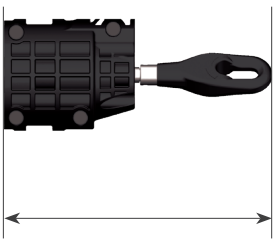

205 mm

Hand chain override

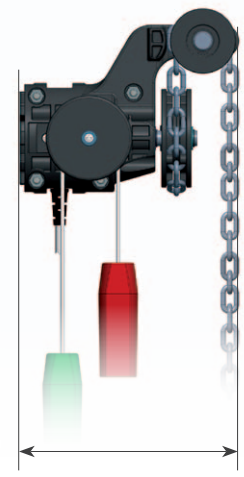

167.5 mm

Kit bbs

Complete kits for the automation of industrial sectional doors.



BBS 70MKF/L
BBS100TKF/L

MAIN FEATURES

- Compact dimensions
- Motors with chain override and digital limits with encoder
- Multifunction control panel
- Easy and fast installation
- Possibility of radio control (optional)

BBS 70MKF
Single-phase 230V~ / 50 Hz

Motor **BBS70MCE**
Control unit **QC41F**
Connection cable **FLSI4P6S.50**
Flanged bracket **ANSZXM**
Square key **TLIN6100**
Coupling with screw **10COLRE01**

BBS 70MKL
Single-phase 230V~ / 50 Hz

Motor **BBS70MCE**
Control unit **QC41L**
Connection cable **FLSI4P6S.50**
Flanged bracket **ANSZXM**
Square key **TLIN6100**
Coupling with screw **10COLRE01**

BBS 100TKF
Three-phase 400V~ / 50 Hz

Motor **BBS100TCE**
Control unit **QC40F**
Connection cable **FLSI4P6S.50**
Flanged bracket **ANSZXM**
Square key **TLIN6100**
Coupling with screw **10COLRE01**

BBS 100TKL
Three-phase 400V~ / 50 Hz

Motor **BBS100TCE**
Control unit **QC40L**
Connection cable **FLSI4P6S.50**
Flanged bracket **ANSZXM**
Square key **TLIN6100**
Coupling with screw **10COLRE01**

KIT COMPONENTS



Motor
BBS100TCE
Three-phase 400V~ / 50 Hz

BBS70MCE
Single-phase 230V~ / 50 Hz

Control unit
QC40F/L
Three-phase 400V~ / 50 Hz



Control unit
QC41F/L
Single-phase 230V~ / 50 Hz





Flanged bracket
ANSZXM

Power supply/limit switch cable
FLSI4P6S.50
Length 5 m



Coupling with screw
10COLRE01

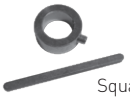

Square key
TLIN6100

TECHINCAL DATA

	BBS70TCE	BBS100TCE	
Torque (Nm)	70	100	
Output Speed (rpm)	21	21	
Mechanical power (kW)	0.20	0.35	
Power Supply (V~) [1]	1~ 230	3~ 230	3~ 400
Absorption (A)	2.80	2.70	1.50
Frequency (Hz)	50		
Max Cycles Per Hour	20		
Limit Switch max turns	18		
Working temperature [2]	-20°C/+60°C		
Protection Rate	IP54		
Hollow shaft (mm)	25.4		
Max. sectional door weight (Kg) [3]	400		
Holding torque (Nm)	450		

[1] Highlighted the default electrical connection diagram.

[2] Nominal values are fully respected within a temperature range from -10°C to +40°C. In case of harsh temperatures there might be a performance drop on the declared values.

[3] Value referred to suitably balanced doors

Notes: Operating sound pressure level SPL<70 dB(A). The operating current in door drives can reach up to 4x the rated current for limited periods

TECHINCAL DATA

	QC41F / QC41L	QC40F / QC40L
Power supply	1~ 230V	3~ 400V
Frequency (Hz)	50/60 Hz	50/60 Hz
Power supply external accessories	24VAC / max 140mA	24VAC / max 140mA
Protection fuse	2 x 6.3 A	3 x 4 A
Motor power	0.55 kW	1.0 kW
Protection rate	IP54	
Working temperature	-10°C / +50°C	
Dimensions	305 x 210 x 120 mm	

FEATURES

	QC40/41F	QC40/41L
Automatic opening	■	■
Automatic closing	■	■
Standard safety beams QCF4	■	■
Optoelectric safety edge QCSE2	■	
Safety edge 8k2	■	
FSS Light curtain		■
Traffic lights	■	■
24Vac contact	■	■
Radio control	**Optional** QCMORAD - 433,92 Mhz radio module	

DIMENSIONS (mm)

bbs70 **bbs100**

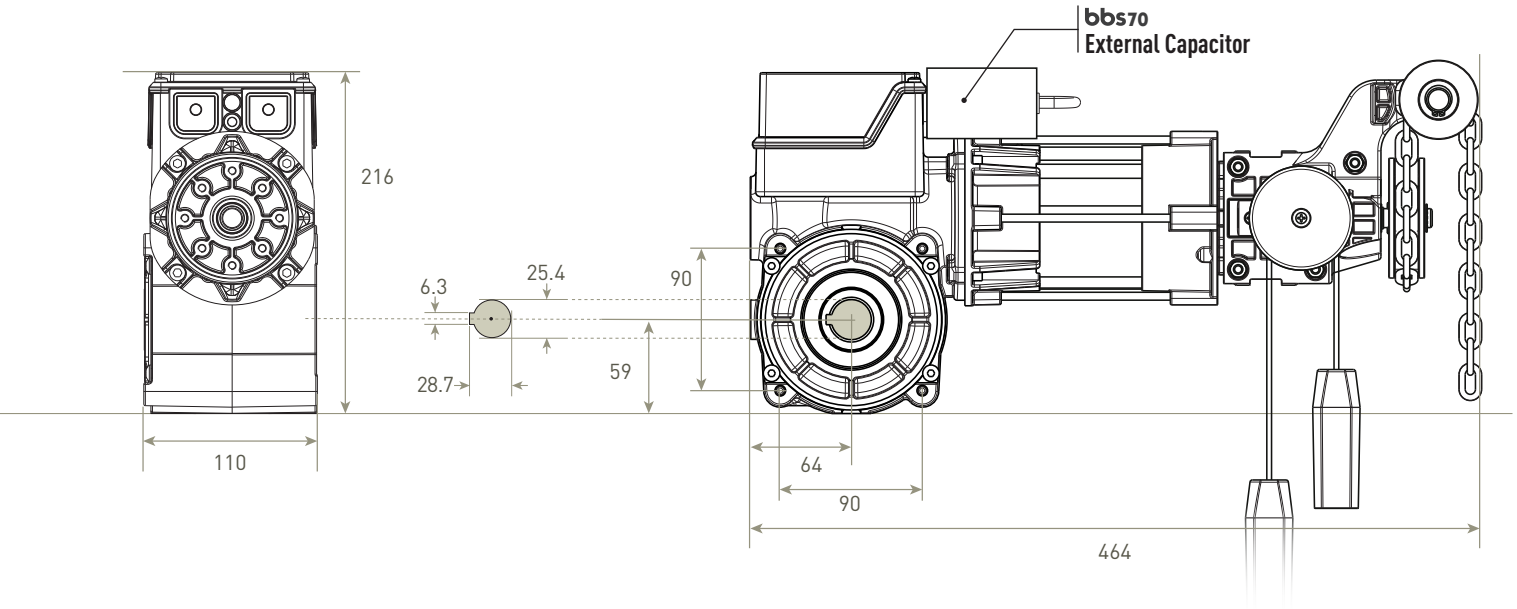

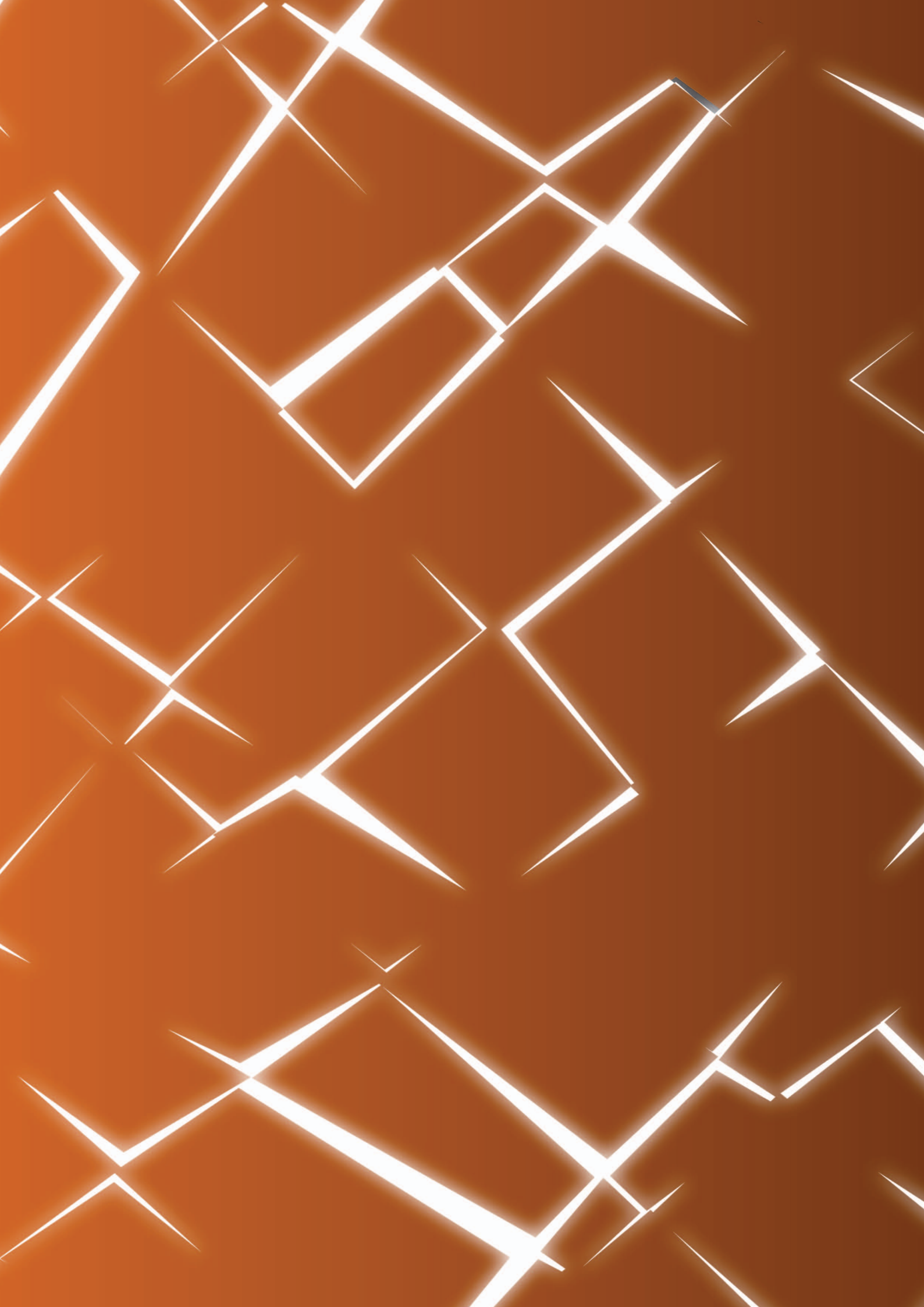

CONTROLS AND DEVICES

Control unit for **three/single-phase motors**

QC800

Automatic control panel for drives with mechanical or digital limits



Features

- Digital control unit (three-phase/single-phase) for motors with digital or mechanical limit switches
- Integrated front-panel buttons for UP, STOP, and DOWN commands
- Display and keypad for limit switch programming and function management
- Various operating modes
- Priority input management (fire alarm)
- TFT interface display
- 5 inputs for anti-crush safety devices:
  - 2 optoelectronic safety edges (or light curtains)
  - 2 photocells
  - 8.2 kΩ safety edge
- Provision for adding a radio receiver
- Traffic light / courtesy light management
- Input for external control panel

Technical details

Power supply	3~ 230/400 VAC - 50/60 Hz	1~ 230 VAC - 50 Hz
Motor power	3~ 400 VAC: max 4 kW 3~ 230 VAC: max 3.0 kW	1~ 230 VAC: max 2.0 kW
Power supply external accessories	24VDC / max 250 mA + 12VDC / max 250mA	
Protection rate	IP54	
Working temperature	-10°C / +50°C	
Dimensions	180 x 380 x 99 mm	

Control unit for **three-phase motors** with inverter

QC600 | QC600S | QC600W

Automatic control panel with frequency inverter for drives with digital limits



Detail of codes according to the length of the cable **supplied**:

5 meter cable:	7 meter cable:
QC600C5	QC600C7
QC600SC5	QC600SC7
QC600WC5	QC600WC7

Features

- Control unit with integrated inverter for rapid doors
- Programmable speed ramps for starting and braking, opening and closing
- User-friendly user interface for simple programming
- Electronic management of digital encoder limit switches
- Pneumatic, 8k2 electric or opto-electric rib management
- Electronic management of two photocells with self-test function
- Inputs for external push-button panel Open - Stop - Close
- Management of intermediate opening, automatic closing, car-wash
- Potential-free programmable auxiliary relay for electro-brake control
- Potential isolated programmable auxiliary relay for use
- Solid state relay for user signal management
- Connector for traffic light plug-in module or 2 programmable relays
- Connector for radio receiver plug-in module

Technical details

	QC600 / QC600S	**QC600W**
Power supply	1~ 230 VAC - 50/60 Hz	3~ 400 VAC - 50/60 Hz
Operating output	3~ 230Vac +/- 15%	3~ 400Vac +/- 15%
Motor power	**QC600**: 0,75 kW / **QC600S**: 2,2 kW	3,0 kW
Power supply external accessories	24VDC / max 160 mA	
Motor output frequency	0-100 Hz	
Max overload	200% (10 sec)	
Working temperature	-10°C / +50°C	
Protection category	IP 54	
Dimensions	445 x 215 x 150 mm	

Control unit for **three/single-phase motors**

QC500 | QC501

Automatic control panel for drives
with mechanical or digital (ver. E) limits



Features

- 3phase (QC500) /1phase (QC501) digital control unit for the control of motors with digital (QC500E, QC501E) or mechanical limit switches (QC500, QC501)
- Integrated buttons in the front cover for UP, STOP and DOWN control
- Display and keyboard for the programming of limit switches and managing of the functions
- Different operating mode
- 3 entries for anti - crushing safety devices:
  - optoelectronic safety edge
  - photocells
  - safety edge 8k2
- Prepared for the addition of a radio receiver
- Prepared for the addition of a module for the management of a traffic light / courtesy lights
- Input for an external control panel
- More room while wiring

Technical details

	QC500	**QC501**
Power supply	3~ 230/400 VAC - 50/60 Hz	1~ 230 VAC - 50 Hz
Motor power	3~ 400 VAC: max 4 kW 3~ 230 VAC: max 2.3 kW	1~ 230 VAC: max 1.5 kW
Power supply external accessories	24VDC / max 250 mA	
Protection rate	IP54	
Working temperature	-10°C / +50°C	
Dimensions	305 x 210 x 120 mm	

Control unit for **three/single-phase motors**

QC400 | QC401

Basic automatic control panel for drives with digital or mechanical limits



Features

- 3phase 230/400V~ control unit (QC400) / 1phase control unit (QC401)
- Connection for electronic or mechanical limits
- 3 safety edge types (Pneumatic, 8k2 electric or optoelectronic)
- Automatic edge type setup
- Increased safety with a second relay with shutdown in case of contactor malfunction
- Simply DIL switch setup on 10 pole DIL switch
- Automatic encoder type and rotation direction by learning
- Photo safety input with automatic test function
- Connector for RF radio module
- Option for Lamp-PCB for traffic light
- Option RS485 output for special features

Technical details

	QC400	QC401
Power supply	3~ 400 VAC / 3~ 230 VAC - 50/60 Hz	1~ 230 VAC
Motor power	3~ 400 VAC: 2.2 kW / 3~ 230 VAC: 1.3 kW	0.75 kW
Power supply external accessories	24 VDC / Max 100 mA	
Protection rate	3 x 10 A	
Protection rate	IP54	
Working temperature	-10°C / +50°C	
Dimensions	305 x 210 x 120 mm	

Control unit for **three/single-phase motors**

QC40F | QC40L

Automatic control panel for BHS motors with digital limits



QC41F | QC41L

Single-phase 230V versions.

Features

- 3phase 400V~ control unit (QC40F/L) / 1phase control unit (QC41F/L)
- Connection for electronic limits
- Automatic opening/closing
- Connection options to safety devices:
  - Safety beams (QCF4/QCF5) and/or optoelectric (QCSE2) (QC40F/QC41F)
  - 8k2 safety edge (QC40F/QC41F)
  - Safety beams (QCF4/QCF5) and/or FSS Light curtain (QC40L/QC41L)
- 24Vac contact
- Simply DIP switch setup with 10 pole DIP switch
- Automatic rotation direction by learning
- Connector for RF radio module (QCMORAD - 433,92 Mhz radio module - optional)
- Option AUX signal output (Traffic lights, ...)

Technical details

	QC40F / QC40L	QC41F / QC41L
Power supply	3~ 400V - 50/60 Hz	1~ 230V - 50/60 Hz
Power supply external accessories	24 VAC / max 140 mA	24 VAC / max 140 mA
Protection fuse	3 x 4 A	2 x 6.3 A
Motor power	1.0 kW	0.55 kW
Protection rate	IP54	
Working temperature	-10°C / +50°C	
Dimensions	305 x 210 x 120 mm	

QC300/E | QC300R/E | QC301/E

Automatic control panel for drives
with mechanical or digital (ver. E) limits



Features

- 3phase 400V~ control unit (QC300/E) / 3phase 230V~ control unit (QC300R/RE) / 1phase control unit (QC301/E)
- More room while wiring
- Quick connections for power and limits cable
- Integrated buttons in the front cover for UP, STOP and DOWN control
- Inter-locked contactors for the best reliability
- Selectable safety input= optoelectric safety edge/nc contacts / 8k2 edge / OSE-FSS contacts
- Selectable DOWN operating mode= dead man/ momentary
- Automatic closing
- Colors/sequences of led for visual display of the main functions/troubleshooting

Technical details

	QC300E / QC300	QC300RE	QC301E
Power supply	3~ 400 VAC - 50/60 Hz	3~ 230 VAC - 50/60 Hz	1~ 230 VAC - 50 Hz
Motor power	4 kW	3.0 kW	2.0 kW
Power supply external accessories	24 VDC / max 70 mA		
Protection fuse	315 mA		
Protection rate	IP54		
Working temperature	-10°C / +50°C		
Dimensions	133 x 208 x 80 mm		

Additional plug-ins

QCMR500

Plug-in radio receiver for QC600/QC500/QC400

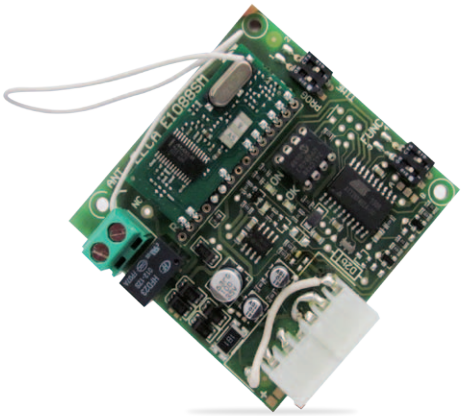

Technical details

Power supply	24 Vcc
Coverage (int/ext)	20/200 m
Exit	NO
Codes	1997
Frequency	433.92 MHz
Transmitter (not included)	QCTE

QCLSM

Plug-in board to control flashing lights, courtesy lamps and traffic lighters for QC600/QC500/QC400

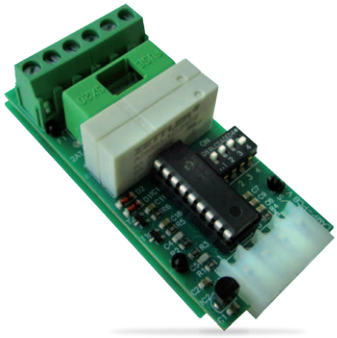

Technical details

Power supply	24 Vdc
External lights power exit	Max 230Vac / 24Vdc
Protection fuse	2 A

QCMORAD

Plug-in radio receiver for BHS Completo and QC40F/L-QC41F/L control units

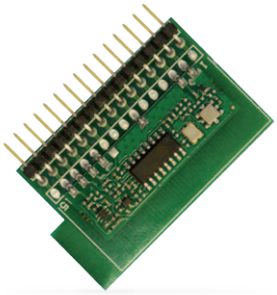

Technical details

Power supply	5 V
Coverage (int/ext)	20/200 m
Frequency	433.92 MHz
Transmitter (not included)	QCTE

Connection cables



Power cable with industrial plug for three-phase control units

3CASPT01 (1 m) (3P + T + N)
3CASPT02 (1 m) (3P + T)



Power cable with industrial plug for single-phase control units

3CASPM01 (1 m) (2P + T)

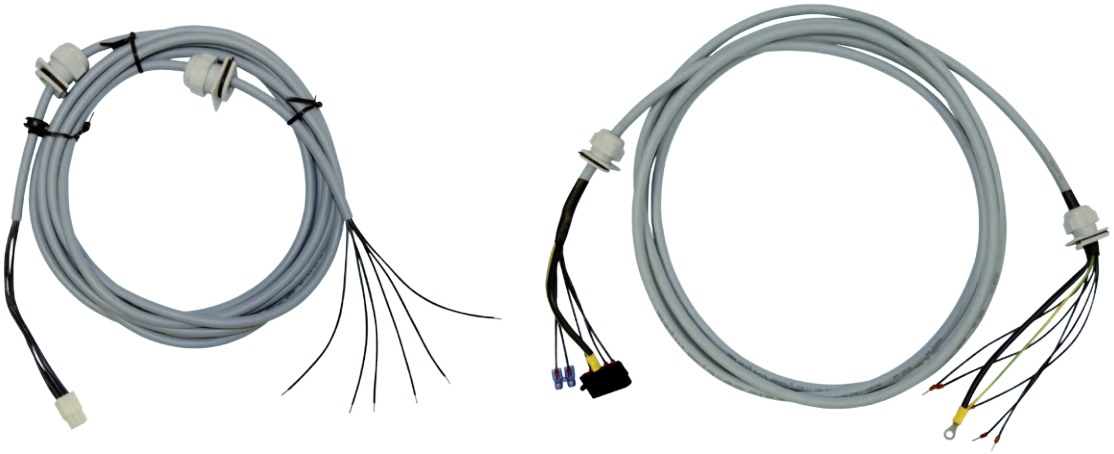

Cable set (power supply/limit switch) for QC600/S/W control units

FLSI600.50 (5 m)
FLSI600.70 (7 m)



Control unit/motor connection cable

FLSI4P6S.50 (5 m)
FLSI4G6.70 (7 m)
FLSI4G6.100 (10 m)

Connection cables

Cable/control unit matching table

Control units	Power cables (supplied with the control units)			Control unit/motor connection cables (to be purchased separately)
	3CASPT01	3CASPT02	3CASPM01	FLSI4P6S.50 FLSI4G6.70 FLSI4G6.100
QC500 / QC500E	■*	■		■
QC501 / QC501E			■	■
QC400 / QC400E	■*	■		■
QC401 / QC401E			■	■
QC40L / QC40L	■*	■		■
QC300	■*	■		■
QC301			■	■
QC300R		■		■

*Cable on request in case of need for N pole

Additional accessories



Extra chain

CAT416	8 m	(ring)
CAT416.70	14 m	(ring)
CAT416.50M	50 m	(reel)



Set for release cord

For BHS	
10SBLRV	(4 m)
For SIDONE	
10SBLRVRC	(4 m)
10SBLRV70RC	(7 m)



QC00

Control unit with radio receiver



Features

QC00 is a basic control unit enabling the remote control of rolling door motors up to 500 W.

- Operating logic: momentary, dead-man (only for closing)
- Remote control
- Safety beams
- Pause timer and automatic closing
- Adjustable working time, from 3 seconds to 4 minutes

Technical details

Power supply	230 Vac - 50 Hz (±10%)
Frequency	433.92 MHz
Power supply external accessories	24 Vac / Max 140 mA
Number of radio codes	15
Protection rate	IP44
Motor power	max 500 W
Working temperature	-10°C /+60°C
Working time	30 sec
Dimensions	145 x 145 x 59 mm
Weight	300 g

QC000

Standard control unit



Features

QC000 is a simple dead man control unit with an IP44 (IP65 upon request) ABS box, suitable for rolling door motors up to 500 W.

- Dead man control
- Stop control
- Safety beams
- Flashing light

Technical details

Power supply	230 Vac - 50 Hz (±10%)
Power supply external accessories	24 Vac /Max 250 mA
Protection rate	IP44
Motor power	max 500 W
Working temperature	-10°C / +50°C
Protection fuse	6.3 A
Dimensions	145 x 145 x 59 mm
Weight	300 g

Control unit for **single-phase** motors

QC201

Automatic control panel with courtesy light



Features

- Operating logic: semiautomatic, automatic, dead-man (only for closing)
- Manual control with integrated buttons in the front cover
- Remote control (QCTE / QCTRKP)
- Safety devices:
  - Safety beams (active also for opening)
  - Optoelectronic safety edge
- Pause timer and automatic closing
- Courtesy light
- Adjustable working time, from 5 seconds to 4 minutes

Technical details

Power supply / Max Motor power	230Vac ± 10% - 50Hz (singlephase) / 800 W		
Exit 24V~	terminals 11 - 12, MIN 20 VAC, MAX 26.5 V~		
Exit 12Vcc	terminals 9 (+) - 3 (GND), MIN 9.5V, MAX 12.5 V		
AUX exit	terminals 13 - 14, 250V - 2A, resistive load		
Protection fuse	4A (delayed)		
Frequency	433.92 MHz		
Protection rate	IP54		
Working temperature	-10°C / +50°C		
Dimensions	140 x 230 x 70 mm		
Maximum current (12V⎓ / 24V~)	**Loading condition**	24V~	12Vcc
	Case 1	0mA	50mA
	Case 2	**70mA**	**40mA**
	Case 3	140mA	10mA

Transmitters for garage, commercial and industrial doors

QCTE

4 channels hand-held transmitter



Technical details

Channels	4
Frequency	433,92 MHz
Power supply	3V mod. CR2430
Battery life (years)	2
Radiated power	<10 mW
Protection rate	IP40
Coverage (int/ext)	20 m / 200 m
Encoding	RC Gaposa
Working temperature	-10°C / +50°C
Dimensions (mm)	35 x 53 x 12

QCTRKP

Wireless wall-mounted digital selector



Technical details

Channels	2
Frequency	433,92 MHz
Power supply	2x 3V mod. CR2430
Battery life (years)	2
Radiated power	<10 mW
Protection rate	IP54
Coverage (int/ext)	20 m / 200 m
Encoding	RC Gaposa
Working temperature	-10°C / +50°C
Dimensions (mm)	75 x 85 x 36

Electronic safety devices

QCSE2

Optoelectronic safety beams

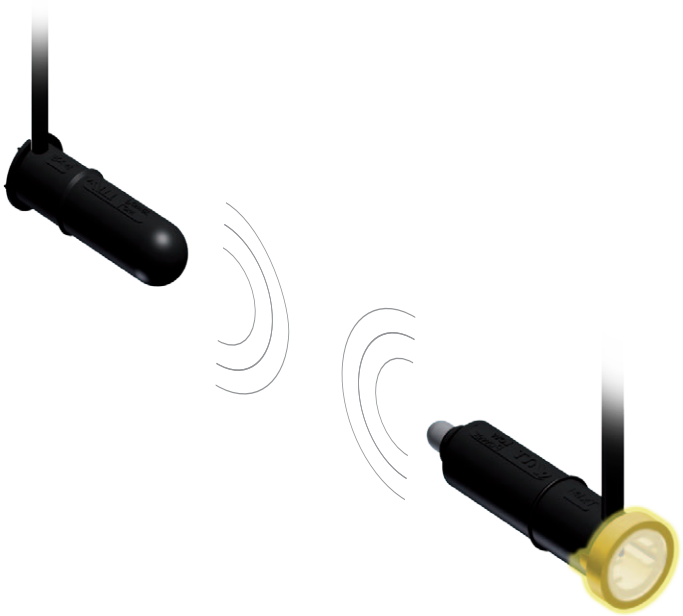

A set of Ø12 mm optical beams, spiral cable, and junction box and two stops (35mm) for complete protection against all obstacles.

- The beams are suitable for all common bottom rubber profiles and assure full functionality even in large door widths. They are less sensitive to wind load and bending and are resistant against voltage reversal and short-circuits
- The cable is tested and guarantee for 100.000 cycles under hard conditions
- The junction box (IP 65) has a very flat design to suit any door slat and a strong strain relief for the spiral cable.



Range	12 m
Operating voltage	9/16V resistant against voltage reversal
Current consumption	typ. 3.8mA
Output	transistor output max. load 20mA short-circuit proofed
Output frequency	automatic recognition typ. 900Hz
Output signal	rectangular signal low level 0-0.5V / high level 2.5-4V
Wire	3x0.14 mm², ø 3.4mm PUR, halogen free, acid-and oil-resistant
Operating temp.	-25°... +75°C
Dimensions (mm)	Ø12 x 39

QCF4

Infra-red safety beams

- Self-aligning
- 15 m range



QCF5

- Self-aligning
- 30 m range



75 x 65 x 30 mm

Power supply	12 - 24V AC/DC
Relay contact	1A MAX 30V DC
Working temperature	–10°C / +60°C
Absorption	2W
Protection Rate	IP54
Dimensions	56x82x24 mm

Accessories for garage, commercial and industrial doors

QCRS1

Receiver



QCRS1 is a self-learning receiver, able to memorise up to 31 codes in a simple and quick way. It features a strong water-tight box.

- Transmitters' radio self-learning
- Sequential transmitters programming
- Proper functionality even in interfered areas.

Power supply	24 V DC/AC
Frequency)	433.92 MHz
Relay	1A / 30 VDC
Irradiation on antenna	-60 dBm
Sensitivity	102 dBm
Consumption (standby)	30 mA
Protection rate	IP55
Working temperature	-20°C /+60°C
Dimensions	50 x 133 x 25 mm
Weight	65 g

QCL4I

Flashing light

It works in intermittent way at 230V
IP44 protection rating
Supplied with wall bracket

85 x 115 x 85 mm



Available in two colors: orange and yellow



ANT433

Aerial

Useful to extend the range of reception of any control unit with radio receiver

- 433/434 MHz
- Cable RG58 4,5 m



Key selectors and pushbuttons for garages, commercial and industrial doors

Blindoor

Aluminium security box with key. Compact design to contain the TWISTY rotary switch and the declutch release of the SPLIT.
It can be surface mounted or installed in the wall.

On demand it is available in the version with antipicking key.



ACS12

167x111x35 mm

ACS12S
with antipicking key

ACSI

Recessed key switch, European cylinder (DIN 18252).
Nylon casing 15mm thin.



75x90x15 mm

ACSE

Surface mounted key switch, European cylinder (DIN 18252).
Aluminium casing 50mm thick.



75x90x50 mm

ACS1

Surface-mounted casing with key cover and UP-0-DOWN switch.



85x80x25 mm

ACP4

Up-stop-down switch for industrial use.



70x140x60 mm

Twisty **ACPG**

"Twisty" rotary switch for surface-mounted installations.



70x70x30 mm

ACPS1C5

Prewired switch 3 positions with spring return.



72x80x56 mm

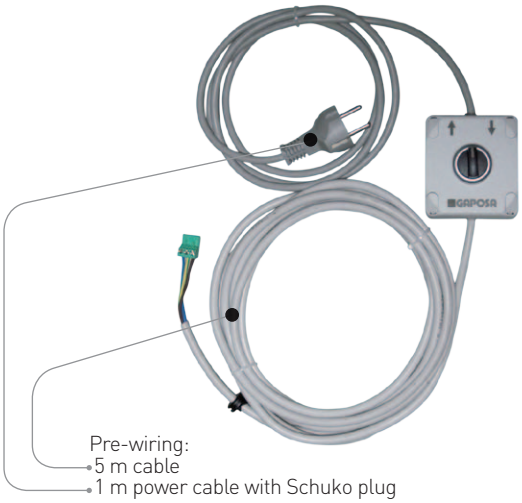

ACP4AC11

Prewired Up-stop-down switch for BHS Completo.



70x140x60 mm

Summary of the characteristics of control units and matching engines

POWER SINGLE PHASE CONTROL UNITS

REFERENCE	DESCRIPTION	Motor maximum power	Dual core cable	Buttons on front cover	Digital display for programming	Standard photocells QCF4/QCF5	Optoelectronic Safety edge QCSE2	Resistive safety edge 8K2	PNP Light curtain	FSS Light curtain	Flashing Light QCL4I	Traffic light	
QC201	Multi-function control with radio receiver with courtesy light	800 W		■		■	■				■		
QC301	1-phase control unit for mechanical limit (6 cams) motors	2.0 kW	■	■		■	■						
QC41L	1-phase multifunction Control unit for digital limit motors	550 W	■	■		■			■	■	■		
QC41F	1-phase multifunction Control unit for digital limit motors	550 W	■	■		■	■	■			■		
QC401	1-phase multifunction control unit for mechanical limit (6 cams) motors	750 W	■	■		■	■	■			■		
QC401E	1-phase multifunction Control unit for digital limit motors	750 W	■	■		■	■	■			■	■ QCLSM	
QC501	1-phase multifunction control unit for mechanical limit (6 cams) motors with display	1.5 kW	■	■	■	■	■	■	■	■	■		
QC501E	1-phase multifunction control unit for digital limit motors with display	1.5 kW	■	■	■	■	■	■	■	■	■		

THREE PHASE CONTROL UNITS

REFERENCE	DESCRIPTION	Motor maximum power	Dual core cable	Buttons on front cover	Digital display for programming	Standard photocells QCF4/QCF5	Optoelectronic Safety edge QCSE2	Resistive safety edge 8K2	PNP Light curtain	FSS Light curtain	Flashing Light QCL4I	Traffic light	
QC300	3-phase control unit for mechanical limit (6 cams) motors	4.0 kW	■	■		■	■						
QC300E	3-phase multifunction Control unit for digital limit motors	4.0 kW	■	■		■	■	■					
QC40L	3-phase multifunction Control unit for digital limit motors	1.0 kW	■	■		■			■	■	■		
QC40F	3-phase multifunction Control unit for digital limit motors	1.0 kW	■	■		■	■	■			■		
QC400	3-phase multifunction control unit for mechanical Limit (6 cams) motors	2.2 kW	■	■		■	■	■			■		
QC400E	3-phase multifunction Control unit for digital limit motors	2.2 kW	■	■		■	■	■			■		
QC500	3-phase multifunction control unit for mechanical limit (6 cams) motors with display	4.0 kW	■	■	■	■	■	■	■	■	■	■ QCLSM	
QC500E	3-phase multifunction control unit for digital limit motors with display	4.0 kW	■	■	■	■	■	■	■	■	■		
QC800	3-phase multifunction control unit for digital/mechanical limit motors with display	4.0 kW	■	■	■	■	■	■	■	■	■		

THREE PHASE CONTROL UNITS WITH FREQUENCY INVERTER

REFERENCE	DESCRIPTION	Motor maximum power	Dual core cable	Buttons on front cover	Digital display for programming	Standard photocells QCF4/QCF5	Optoelectronic Safety edge QCSE2	Resistive safety edge 8K2	PNP Light curtain	FSS Light curtain	Flashing Light QCL4I	Traffic light	
QC600	Multifunction control unit for digital limit RAPIDO Motors with display and frequency inverter	750 W	■	■	■	■	■	■	■	■	■		
QC600S	Multifunction control unit for digital limit RAPIDO motors with display and frequency inverter	2.2 kW	■	■	■	■	■	■	■	■	■	■ QCLSM	
QC600W	Multifunction control unit for digital limit RAPIDO motors with display and frequency inverter	3.0 kW	■	■	■	■	■	■	■	■	■		

POWER SINGLE PHASE CONTROL UNITS

Radio Receiver	Working time	Automatic UP	Automatic Closing	Courtesy light	24V Power output	Safety beams Auto diagnostic	SPLIT Central operator	XQ Tubular motor	BRD 140/180/250 Rolling door	MIDI Rolling door	MAXXI Rolling door	BHS/BBS Sectional door	RAPIDO Hi-speed door ≤ 90 rpm	RAPIDO Hi-speed door ≥ 130rpm
■	■	■	■	■ integrated	AC		■	■				■ ver. H		
■ QCRS1	■	■	■		AC							■ ver. M		
■ QCMORAD		■	■		AC	■ with FSS						■ ver. E		
		■	■		AC							■ ver. E		
■ QCMR 500	■	■	■		DC	■						■ ver. M		
	■	■	■		DC	■						■ ver. E		
	■	■	■	■	DC	■						■ ver. M		
	■	■	■	■	DC	■						■ ver. E		

THREE PHASE CONTROL UNITS

Radio Receiver	Working time	Automatic UP	Automatic Closing	Courtesy light	24V Power output	Safety beams Auto diagnostic	SPLIT Central operator	XQ Tubular motor	BRD 140/180/250 Rolling door	MIDI Rolling door	MAXXI Rolling door	BHS/BBS Sectional door	RAPIDO Hi-speed door ≤ 90 rpm	RAPIDO Hi-speed door ≥ 130rpm
■ QCRS1	■	■	■		AC				■ ver. M	■ ver. M	■ ver. M	■ ver. M	■ ver. M	
■ QCMORAD	■	■	■						■ ver. E	■ ver. E	■ ver. E	■ ver. E	■ ver. E	
		■	■		AC	■ with FSS						■ ver. E		
		■	■		AC							■ ver. E		
■ QCMR 500	■	■	■		DC	■			■ ver. M			■ ver. M	■ ver. M	
	■	■	■		DC	■			■ ver. E			■ ver. E	■ ver. E	
	■	■	■	■	DC	■			■ ver. M	■ ver. M	■ ver. M	■ ver. M	■ ver. M	
	■	■	■	■	DC	■			■ ver. E	■ ver. E	■ ver. E	■ ver. E	■ ver. E	
■	■	■	■	■	AC	■			■	■	■	■	■	

THREE PHASE CONTROL UNITS WITH FREQUENCY INVERTER

Radio Receiver	Working time	Automatic UP	Automatic Closing	Courtesy light	24V Power output	Safety beams Auto diagnostic	SPLIT Central operator	XQ Tubular motor	BRD 140/180/250 Rolling door	MIDI Rolling door	MAXXI Rolling door	BHS/BBS Sectional door	RAPIDO Hi-speed door ≤ 90 rpm	RAPIDO Hi-speed door ≥ 130rpm
■ QCMR 500	■	■	■	■	DC	■							■ ver. E For correct matching to the motors, refer to the table on page 145.	
	■	■	■	■	DC	■								
	■	■	■	■	DC	■								

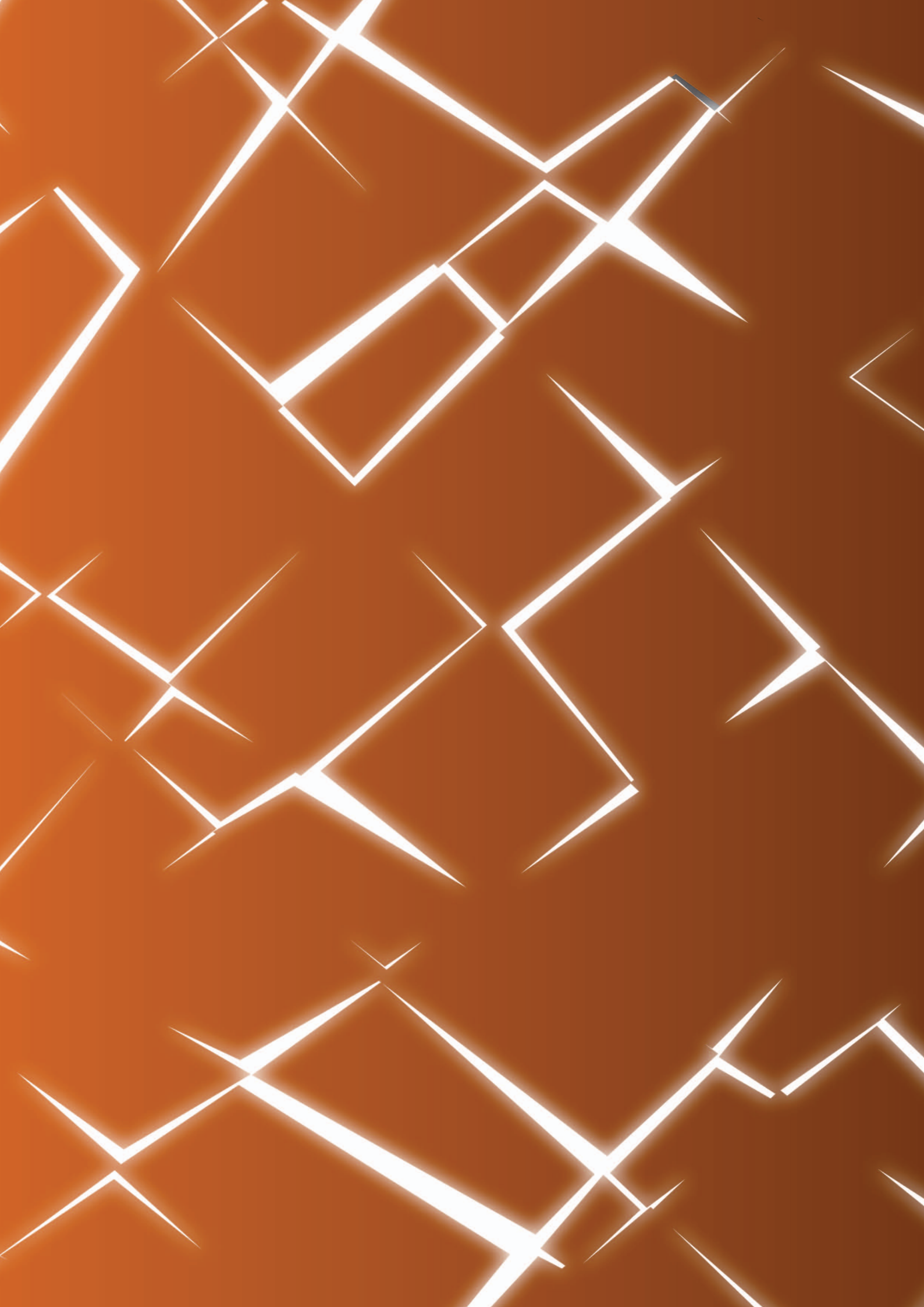

SAFETY BRAKES

SAFETY DEVICES FOR ROLLING SHUTTERS WITHOUT SPRINGS

DESCRIPTION

The safety brake is a safety device for rolling shutters without springs performing two functions:

- A bearing support for the shutter's shaft
- A mechanical brake blocking the fall of the shutter if a sudden acceleration occurs.

It is made up of antioxiding materials, consists of a central body with a hollow shaft and is supported by a floating metal base preventing any tube eccentricity (except M1A/H, P200).
The GAPOSA safety brakes are equipped with a patented shock-absorber system and a microswitch for disconnecting the electrical supply to the motor when the brake locks.

In order to select the most suitable model for the best application, a good understanding of the safety brake data is essential.

Nominal torque
It is the key value to select the most appropriate safety brake according to the weight of the shutter and the diameter of the tube. Make sure that the torque of the operator is less than the nominal
torque of the safety brake.

Locking torque
It is the maximum stress which the safety brake is subjected to when it stops the rotation of the shaft.

Working speed
It refers to the number of revolutions where the safety brake works as a simple support without functioning as a safety device. The speed of the shutter tube has to be within this value.

RANGE

- **M1A/H** 80 Nm
- **P200/H/M** 137 Nm
- **M3A** 258 Nm
- **M4A** 404 Nm
- **M7A** 708 Nm
- **M10A** 1000 Nm
- **M15A** 1551 Nm
- **M20A** 2200 Nm
- **M30A** 3109 Nm

SAFETY BRAKES

M1A
P200

Safety brakes with symmetrical surfaces for installation without conditions

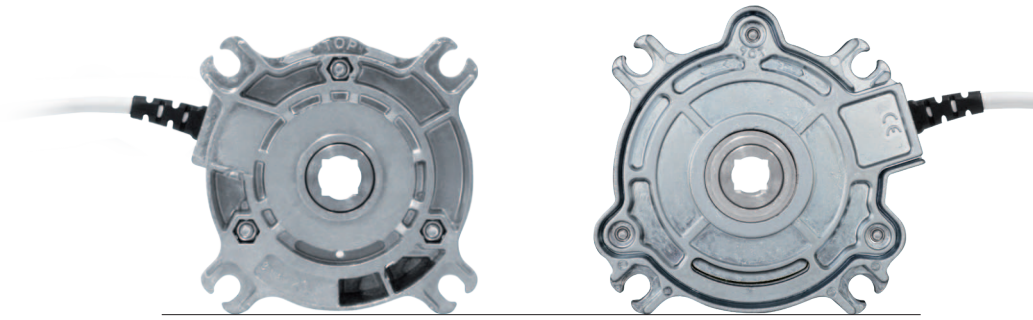

M1A P200

	M1A	P200
Nominal torque (Nm)	80	137
Locking torque (Nm)	436	575
Working speed (rpm)	22	22
Screw tightening torque (Nm)	4.0	8.0
Approval number	TorFV 10/154	TorFV 18/185
Weight (Kg)	0.85	1

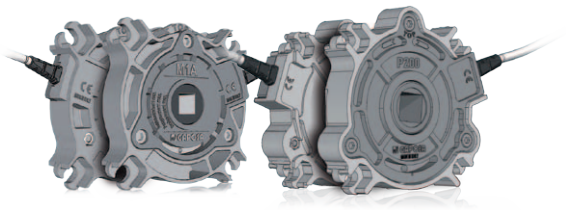

Symmetrical surfaces Bidirectional locking system

Specific versions

M1H / P200H

H versions featuring a **free rolling pre-set**.
The brake is supplied in free rolling condition, meaning the locking component is disabled until a cord is pulled out thus activating it.

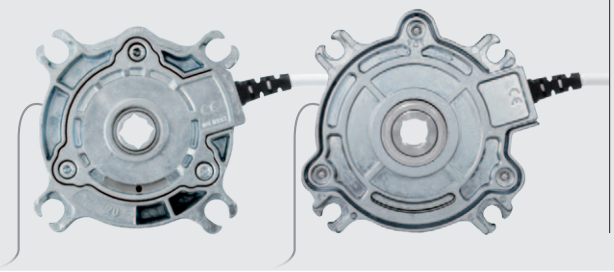

P200M

Developed for specific end caps, the P200M safety brake has a galvanized protection.

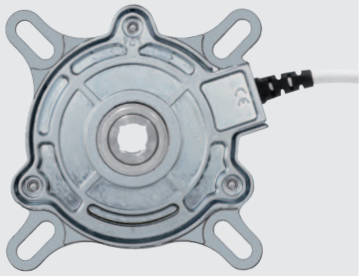

M3A

Nominal torque (Nm)	258
Locking torque (Nm)	978
Working speed (rpm)	16
Screw tightening torque (Nm)	5.5
Approval number	TorFV 7/125
Weight (Kg)	2.1

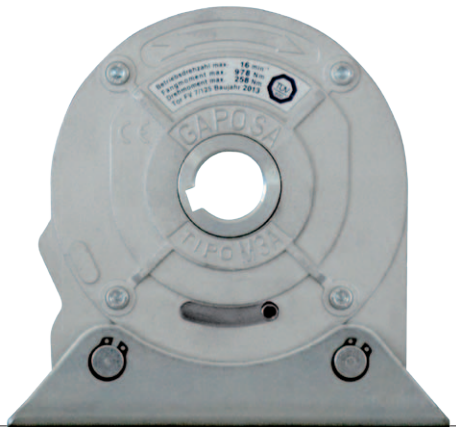

M4A
M7A
M10A

	M4A	M7A	M10A
Nominal torque (Nm)	404	708	1000
Locking torque (Nm)	1979	3299	3560
Working speed (rpm)	14	12	12
Screw tightening torque (Nm)	5	6	8
Approval number	TorFV 5/065	TorFV 5/066	TorFV 5/067
Weight (Kg)	4.7	10	12.5

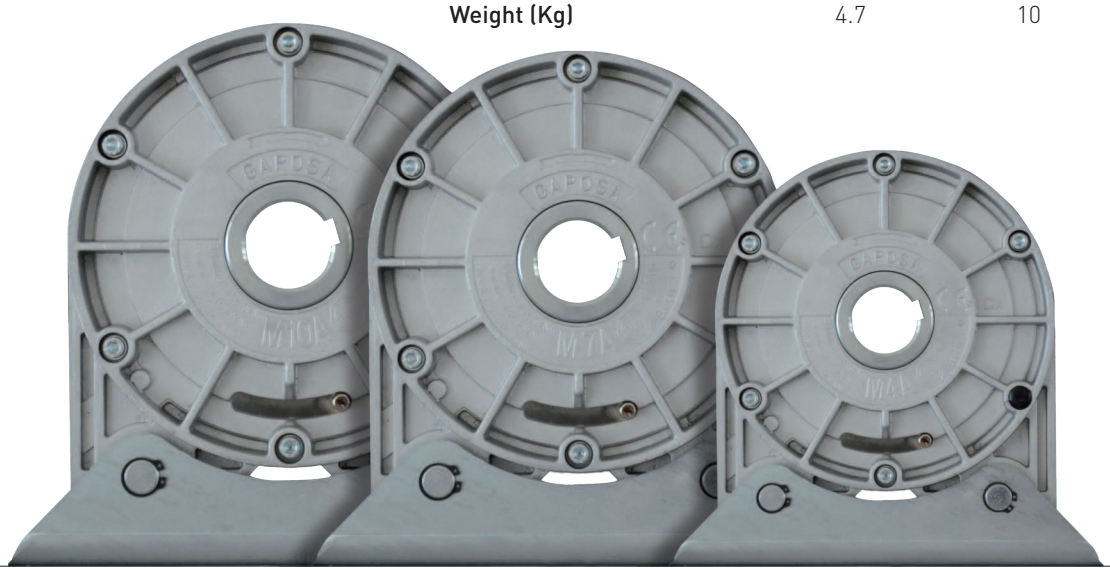

M15A
M20A
M30A

	M15A	M20A	M30A
Nominal torque (Nm)	1551	2200	3109
Locking torque (Nm)	8842	16588	-
Working speed (rpm)	18	12	12
Screw tightening torque (Nm)	12	26	30
Approval number	TorFV 7/126	-	-
Weight (Kg)	19.5	20	45

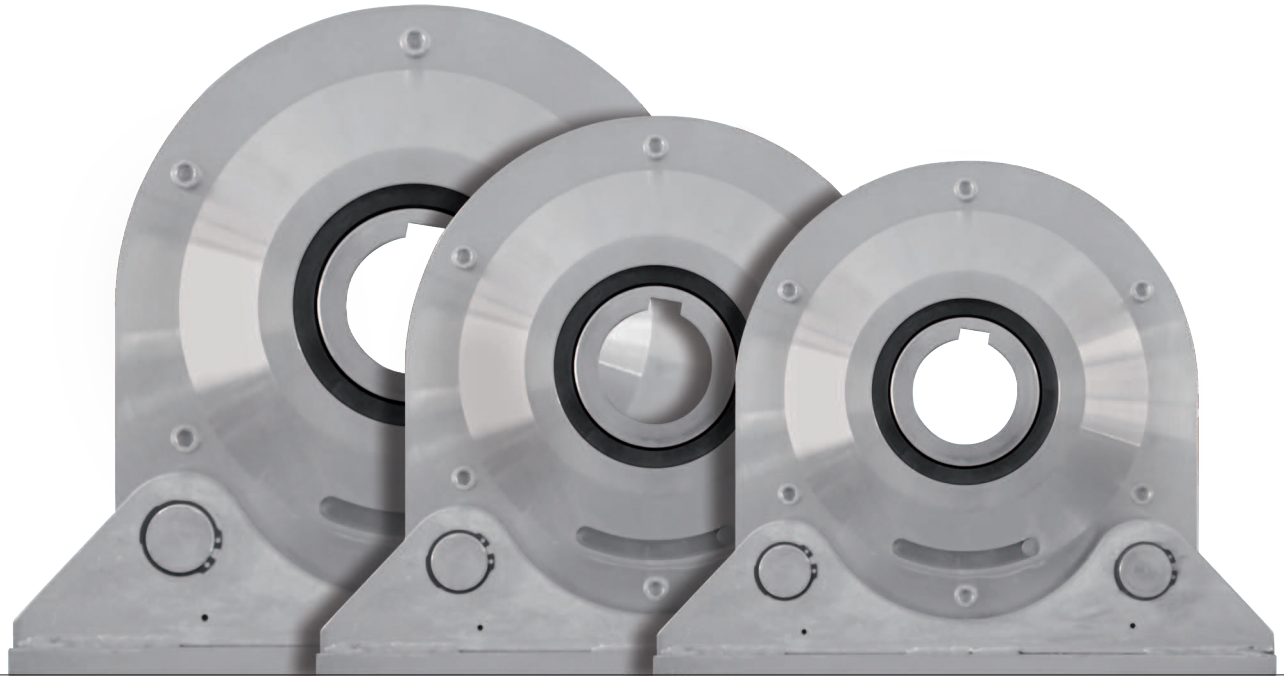

SAFETY BRAKE

Dimensions (mm)

M1A / M1H

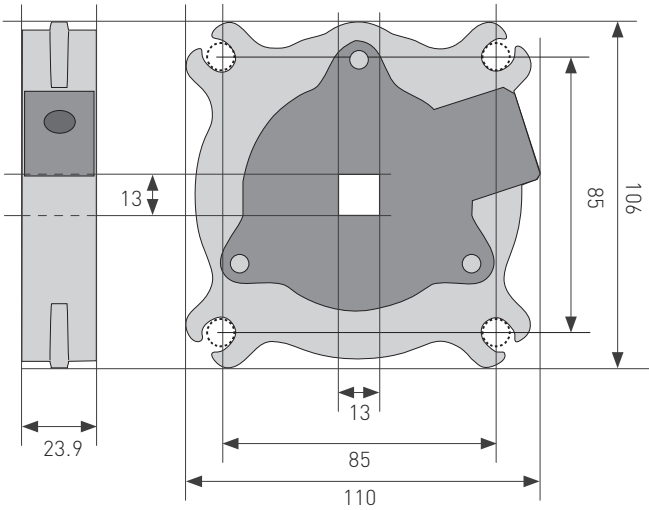

P200 / P200H

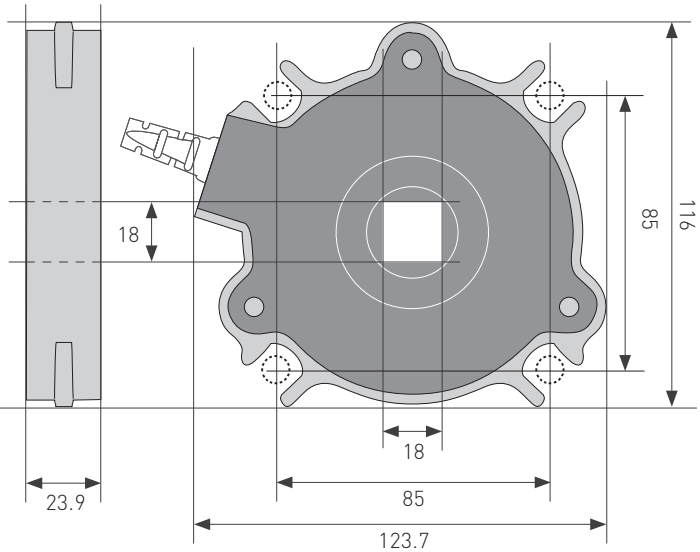

P200M

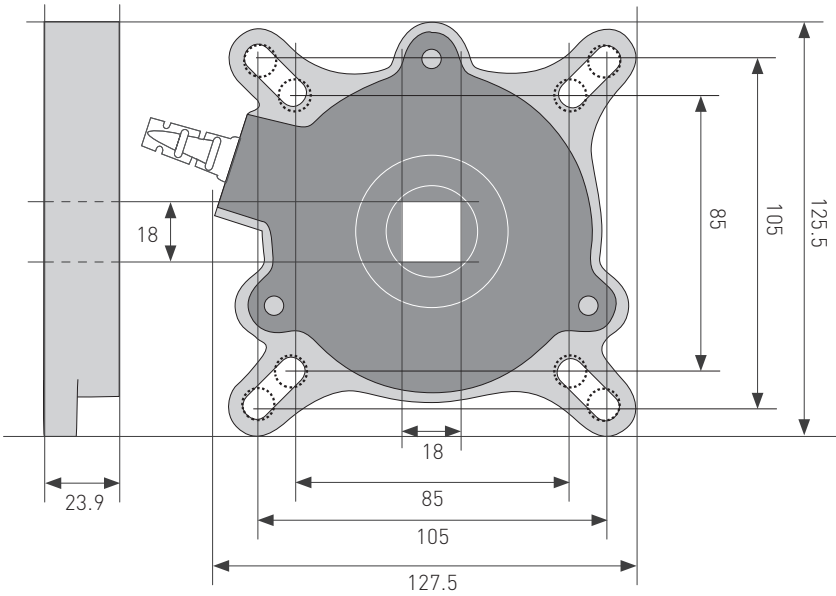

M3A
M4A
M7A
M10A
M15A
M20A
M30A

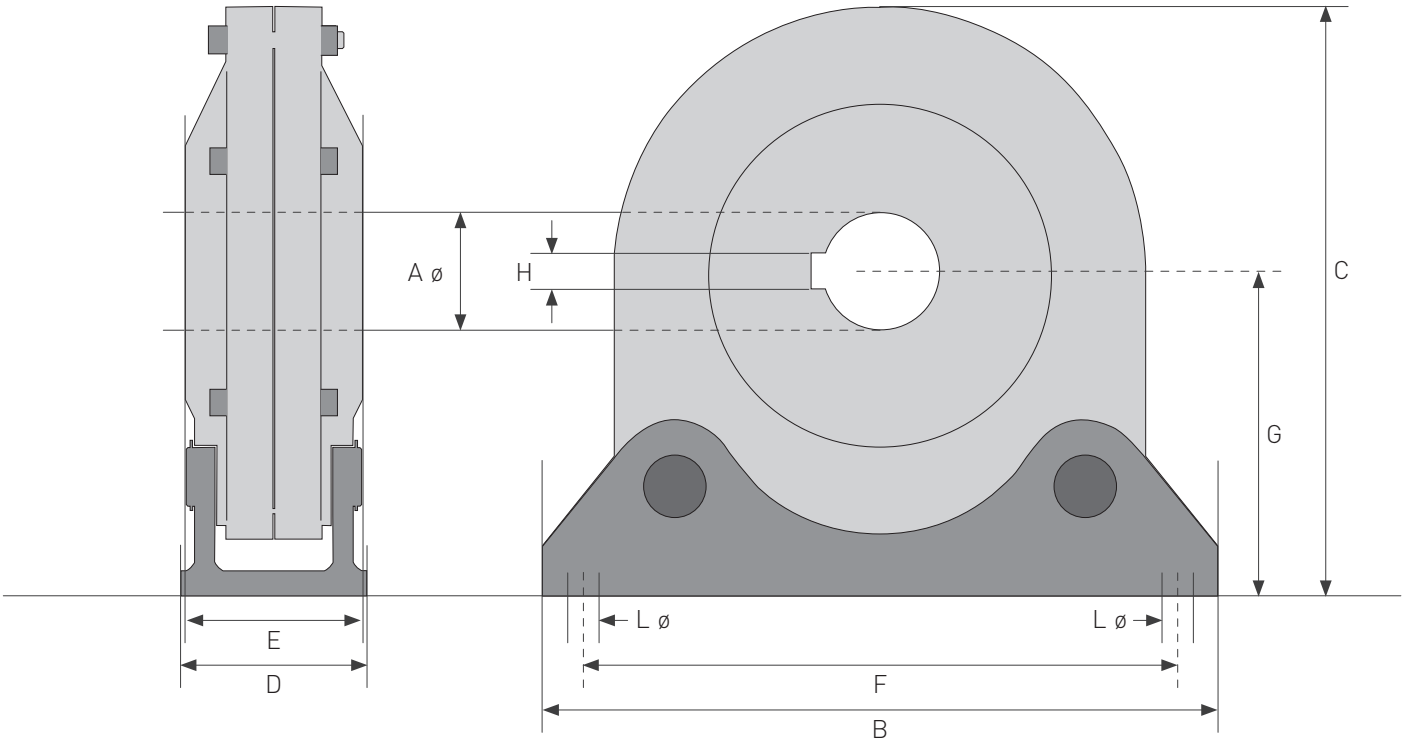

Segment (mm)	M3A	M4A	M7A	M10A	M15A	M20A	M30A
A ø	25	30	40	40	50	65	70
B	165	216	268	280	320	345	415
C	158	202	255	260	265	290	348
D	33	56	56	71	80	80	110
E	30	50	55	57	58	63	105
F	145	186	240	240	290	315	365
G	91	122	151	156	140	153	191
H	8	8	12	12	14	18	20
L ø	9	12	16	16	17	17	22
Fastening screws	2 x M8	2 x M10	2 x M14	2 x M14	2 x M16	2 x M16	2 x M20

Adjustable caps (CLIP)
M1A

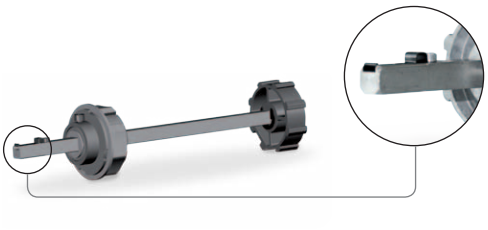

SQUARE SHAFT 13 mm - LENGTH 250 mm

AXCL135725	for 70 mm octagonal tube
AXCL137825	for 78 mm round tube
AXCL138925	for 89 mm Deprat tube

SQUARE SHAFT 13 mm - LENGTH 600 mm

AXCL138960	for 89 mm Deprat tube

Adjustable caps (CLIP)
P200

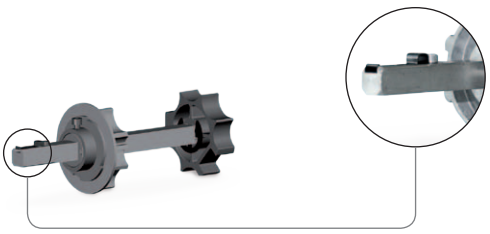

SQUARE SHAFT 18 mm - LENGTH 250 mm

AXCL185725	for 70 mm octagonal tube
AXCL187825	for 78 mm round tube
AXCL187025	for 70 mm round tube
AXCL188925	for 89 mm Deprat tube
AXCL1810125	for 101.6x3.6 mm round tube
AXCL18101225	for 101.6x2.0 mm round tube

SQUARE SHAFT 18 mm - LENGTH 600 mm

AXCL188960	for 89 mm Deprat tube

Adjustable caps (STANDARD)
M1A

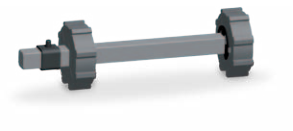

SQUARE SHAFT 13 mm - LENGTH 250 mm	
AXC135725	for 70 mm octagonal tube
AXC13ZF8025	for 80 mm ZF round tube
AXC13589	for 89 mm Deprat tube
AXCR131012	for 101,6x3,6 mm round tube
AXCR1370	for 70 mm round tube
AXC13O625	for 60 mm octagonal tube

Adjustable caps (STANDARD)
P200

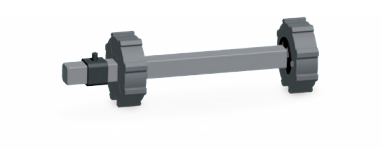

SQUARE SHAFT 18 mm - LENGTH 250 mm	
AXC5725	for 70 mm octagonal tube
AXCZF6425	for ZF 64 mm tube - **Max motor torque allowed: 40Nm**
AXCZF8025	for 80 mm ZF round tube
AXCR7025	for 70 mm round tube
AXCD58925	for 89 mm Deprat tube
AXCR10125	for 101.6x3.6 mm round tube
AXCR101225	for 101.6x2.0 mm round tube

SQUARE SHAFT 18 mm - LENGTH 600 mm	
AXCD58960	for 89 mm Deprat tube

SAFETY BRAKES Selection table

The following table helps you to select the right safety brake according to the weight and sizes of the shutter and the tube diameter.

P200

ø TUBE x THICKNESS (mm) ►		70x2.6			83x1.5			88.9x3.2			98x2		
SHUTTER HEIGHT (m) ►		3	5	7	3	5	7	3	5	7	3	5	7
SHUTTER WIDTH (m) ►	3	150	86	57	129	75	50	207	174	117	198	139	95
	5	150	86	57	129	75	50	188	174	117	182	139	95
	7	150	86	57	129	75	50	174	174	117	170	139	95
	9	150	86	57	129	75	50	164	165	117	161	139	95
	11	150	86	57	129	75	50	156	157	117	154	139	95

SHUTTER MAXIMUM WEIGHT (Kg)

ø TUBE x THICKNESS (mm) ►		101.6x3.6			108x3.6			125x1.5			133.3x4		
SHUTTER HEIGHT (m) ►		3	5	7	3	5	7	3	5	7	3	5	7
SHUTTER WIDTH (m) ►	3	196	197	175	190	191	193	173	174	121	168	171	174
	5	181	182	175	177	178	180	166	166	121	163	166	168
	7	169	170	171	167	168	169	158	159	121	158	159	121
	9	160	161	162	158	160	161	151	152	121	150	153	155
	11	153	154	155	152	153	154	146	146	121	145	148	150

SHUTTER MAXIMUM WEIGHT (Kg)

M3A

ø TUBE x THICKNESS (mm) ►		88.9x3.2			101.6x3.6			108x3.6			133.3x4			159x4.5			168x4.5		
SHUTTER HEIGHT (m) ►		3	5	7	3	5	7	3	5	7	3	5	7	3	5	7	3	5	7
SHUTTER WIDTH (m) ►	3	285	285	285	360	312	279	351	306	275	314	284	259	279	260	242	267	252	235
	5	168	165	165	245	245	245	279	279	275	314	283	259	278	260	241	266	251	235
	7	112	112	112	167	167	167	191	191	191	314	283	258	278	259	259	265	250	234

SHUTTER MAXIMUM WEIGHT (Kg)

M4A

ø TUBE x THICKNESS (mm) ►		133.3x4			159x4.5			168x4.5			177.8x5			193.7x5.4			219.1x5.9		
SHUTTER HEIGHT (m) ►		3	5	7	3	5	7	3	5	7	3	5	7	3	5	7	3	5	7
SHUTTER WIDTH (m) ►	3	493	425	375	434	387	348	412	373	338	392	359	327	360	336	309	312	300	280
	5	345	345	345	430	384	345	408	369	333	387	354	322	353	329	303	303	290	272
	7				389	380	342	386	364	330	382	349	318	347	323	297	293	281	263

SHUTTER MAXIMUM WEIGHT (Kg)

M7A

ø TUBE x THICKNESS (mm) ►		177.8x5			193.7x5.4			219.1x5.9			244.5x6.3			267x7.1		
SHUTTER HEIGHT (m) ►		3	5	7	3	5	7	3	5	7	3	5	7	3	5	7
SHUTTER WIDTH (m) ►	3	553	510	467	509	480	444	446	433	408	394	389	373	353	351	341
	5	548	506	464	505	475	470	439	426	402	384	380	364	340	339	329
	7	545	503	460	499	470	435	432	419	396	375	371	355	328	327	318

SHUTTER MAXIMUM WEIGHT (Kg)

M10A

ø TUBE x THICKNESS (mm) ►		193.7x5.4			219.1x5.9			244.5x6.3			267x7.1			298.5x7.1			323.9x8		
SHUTTER HEIGHT (m) ►		3	5	7	3	5	7	3	5	7	3	5	7	3	5	7	3	5	7
SHUTTER WIDTH (m) ►	3	823	759	692	721	686	637	632	616	581	564	557	533	486	484	472		427	421
	5	816	753	687	711	676	629	619	603	570	547	540	517	465	463	451		399	393
	7	809	746	681	701	667	619	606	590	557	529	522	500	443	441	430		370	365

SHUTTER MAXIMUM WEIGHT (Kg)

M15A

ø TUBE x THICKNESS (mm) ►		219.1x5.9			244.5x6.3			267x7.1			298.5x7.1			323.9x8			368x8			419x8.8	
SHUTTER HEIGHT (m) ►		3	5	7	3	5	7	3	5	7	3	5	7	3	5	7	3	5	7	3	5
SHUTTER WIDTH (m) ►	3	1160	1142	1095	1139	1033	1007	948	944	933	843	840	837	767	767	765	665	664	663	567	566
	5	1156	1138	1091	1033	1028	1002	941	937	926	834	831	828	757	756	754	650	649	648	546	545
	7	868	868	868	1028	1023	997	934	931	919		822	820	746	744	742	635		633	523	524

SHUTTER MAXIMUM WEIGHT (Kg)

M20A

ø TUBE x THICKNESS (mm) ►	244.5x6.3	267x7.1	298.5x7.1	323.9x8	355.6x8	368x8	406.4x8.8	419x8.8	457.2x10	508x11
SHUTTER MAXIMUM WEIGHT (Kg) ►	1615	1480	1320	1220	1110	1073	970	940	860	775

M30A

ø TUBE x THICKNESS (mm) ►	244.5x6.3	267x7.1	298.5x7.1	323.9x8	355.6x8	368x8	406.4x8.8	419x8.8	457.2x10	508x11
SHUTTER MAXIMUM WEIGHT (Kg) ►	2300	2100	1880	1730	1575	1520	1382	1339	1227	1100

General terms of sale

1. **PRICES** - Prices are subject to variation without notice. Should our costs increase, the agreed prices may be varied at any time even throughout the supplying stage. Prices are for goods delivered ex-works.
2. **DELIVERY DATES** - Despatch dates are guideline and not binding. No compensation of any kind will be paid for any direct or indirect damage due to delayed deliveries, or total or partial interruption of the supply of goods.
3. **SHIPMENT & TRANSPORT** - The goods are always shipped at the purchaser's risk, even if they are sold CIF. If no specific agreement is reached, they will be shipped by the means considered the most appropriate and no responsibility will be accepted for any delays. The purchaser must verify quantities and perfect state of the goods at their arrival.
   Any complaint for missing or damaged goods must be notified right upon delivery to the transport agency. No returns or complaints will be accepted after eight days from receipt of the goods by the purchaser.
4. **PAYMENT** - Goods will be paid (even in partial deliveries) as specified in the invoice at our address. The purchaser cannot postpone payment beyond the expiry date for any reason. Any charges for possible outstanding payments are at the buyer's expense as well as the interest on arrears that we calculate in case of delayed payments.
5. **WARRANTY** - Duration: On residential motorisations, GAPOSA grants a total warranty of 5 years upon the invoicing date. On industrial and commercial motorisations and on all controls and devices, GAPOSA grants a total warranty of 2 years upon the invoicing date.
   By warranty we mean the replacement or repair, free of charge, of defective equipment which we also consider as such, as faulty design, material or workmanship. Equipments that are repaired or replaced during the warranty period are subject to the same conditions. All costs met for shipping the items under warranty are of the purchaser's charge.
6. **EXCEPTIONS TO THE WARRANTY** - The warranty does not cover:
   - those products damaged because of a wrong installation or as a consequence of an improper use;
   - those products damaged by an electrical connection not in compliance with the diagrams provided with the products or with the rules in force or products damaged as a consequence of a breakdown or defect of the electric mains;
   - the damages that occur when products are used in a way different from the one indicated by the manufacturer;
   - the consequences of natural catastrophes, reasons of "force majeure" or fortuitous events;
   - those defects due to the use of electric and control accessories of other manufactures (such as, control boards, electric accessories and any other article that may be not compatible with GAPOSA equipments);
   - the expenses for repairing and replacing the damaged products after being installed on systems that work badly because of an improper installation;
   - the expenses met for the disassembly and reinstallation of the products;
   - the transport charges for the items to be repaired.
7. **VARIANTS** - Any waivers of these terms of sale indicated above which are agreed between the parties will be strictly limited to the agreements reached and will never imply variations of the remaining conditions, which will continue to be unchanged and confirmed, where no specific reference is made.
8. **LEGAL JURISDICTION** - The only law court with jurisdiction over any dispute shall be the law court of Fermo.
9. **PATENT PROTECTION** - Some technical solutions of the drives and safety brake are covered by international patents.

0626



GAPOSA srl
via Ete, 90 - 63900 Fermo - Italy
Tel. +39.0734.220701
info@gaposa.com
www.gaposa.com

GAPOSA INC.
2550 Blvd of the Generals
Eagleville, PA 19403 - USA
Tel. 484.927.4385
salesus@gaposa.com

GAPOSA FRANCE sarl
Parc Aktiland II - 7 rue de Lombardie
69800 Saint-Priest - France
Tel. +33 (0)4 72 79 74 30

GAPOSA ESPAÑA 99 sl
Pol. Ind. Els Mollons - C/ Cullerers, 27
46970 Alaquàs (Valencia) - España
Tel. +34.961501380

GAPOSA S.E. EUROPE LTD
Ulitsa "Poruchik Nedelcho Bonchev" 10
1528 NPZ Iskar, Sofia - Bulgaria
Tel. +30 6981 547 300

盐城市格泊萨贸易有限公司
YANCHENG GAPOSA TRADING CO., LTD
江苏盐城城南新区大数据产业园南楼10楼
10th floor, A Block, S&T Building, Dashuju
Industrial Park, Yancheng Jiangsu China 224004

KAISER NIENHAUS Komfort & Technik GmbH
Daimlerstraße 1, 46414 Rhede - Deutschland
Tel. +49-2872-9183040
www.kaiser-nienhaus.de

METALLPRESS MP GmbH
Lappacher Weg 23
D-91315 Höchstadt a. d. Aisch - Deutschland
Tel. 0049 (0)9193 1525
www.metallpress.de